WSS

Hardware Solution for Doors

Door- and Gate Hinges

3D-PLUS Door Hinges

2D Aluminium Door Hinges

Aluminium Door Hinges

Steel-/Stainless Steel Door Hinges

Construction Hinges

Weld-on Hinges

Gate Hinges

Special Hinges

Barrel Door Hinges

Accessories

Table of contents

General Information ..... **Page 3**

3D-PLUS Aluminium Door Hinges ..... **Page 4**
3D-PLUS Aluminium Door Hinges for Light Alloy Doors ..... Page 4
General Proposals for Door Hinges Configuration ..... Page 5

2D Aluminium-Türbänder ..... **Page 18**
2D Aluminium Door Hinges for Light Alloy Doors ..... Page 18
General Proposals for Door Hinges Configuration ..... Page 19

Aluminium Door Hinges ..... **Page 28**
Aluminium Door Hinges for Light Alloy Doors ..... Page 28
General Proposals for Door Hinges Configuration ..... Page 29

Steel-/Stainless Steel Door Hinges ..... **Page 34**
Steel-/Stainless Steel Door Hinges ..... Page 34
General Proposals for Door Hinges Configuration ..... Page 35
General Proposals for Door Hinges Configuration for
Heavy Duty Door Hinges ..... Page 38

Construction Hinges ..... **Page 41**

Weld-on Hinges ..... **Page 46**

Gate Hinges ..... **Page 50**

Special Hinges ..... **Page 51**

Barrel Door Hinges ..... **Page 58**

Accessories ..... **Page 59**

Frequently asked questions

What is the general buckling load of door hinges ruled by?
The general buckling load is ruled by EN 1935. Depending on the application areas, the hinges are divided into 4 different usage classifications (light, medium, strong, very strong). Additional information you can find on the pages for general proposals for hinge configuration.

What is the purpose of distance bushes?
Distance bushes is a fixing accessory for outward opening doors.
They prevent a compression of the door profile.

What is a shadow flute?
The shadow flute is the visible, afloating flute between the blind- and the leaf frame. The width of that flute must be specified for orders of drilling jigs.

How can the correct quantity of hinges for a door be determined?
The quantity of hinges depends on noumerously factors like leafwidth, leaf weight, profile thickness, construction of the blind frame, door opening type, usage classification and hinge fixing.
You can find more information on the pages 5, 19, 29, 35 and 38 by the general proposals for hinge configuration.

What is the distance of the center rotation?
This measurement describes the distance between screw-on face and the axis of a hinge.

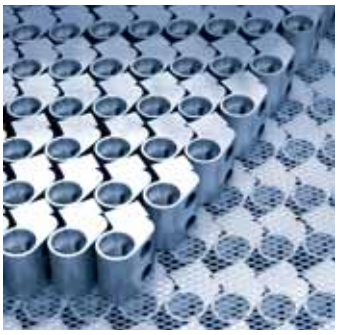

What is the axis dimension?
The axis dimension describes the horizontal fixing distance of a hinge.

What is the advantage of an inlaid hinge?
Inlaid hinges arie invisible, because they are completely concealed by the door profile.

What is a fastening bolt **good for?**
A fastening bolt prevents a hinge-sided lift-up of the door.

What does maintenance-free mean concerning hinges?
Maintenance-free hinges do not have to be greased due to high-quality bearing bushes.

3D-PLUS Door Hinges

Door weights up to 180 kg, generous adjustability and upgradable to class RC3 – an allrounder

Surface colours may be adapted to the doors' design. In addition to all anodized-colours, 3D-PLUS door hinges also come in all RAL-colours..

3D-PLUS Door Hinge **PLANAR**

****Burglary resistant door hinges with RC/SKG classification:**
Door elements with RC or SKG specification have to be executed according to test certificates and system providers' advisory opinions.
The tests have to be executed for the complete door element, certificates and advisory opinions can be requested from the system provider.
The assembly has to be carried out in accordance with the WSS assembly instruction.

3D-PLUS Aluminium Door Hinges for Light Alloy Doors

- any adjustment possibilities can be carried out on already installed doors (one-man operation)
- stepless horizontal adjustment +2/-3 mm
- stepless vertical adjustment ±2,75 mm
- pressure adjustment ±0,75 mm
- right/left usable due to fast retrofitting

3D-PLUS Aluminium Door Hinges, 2-parts

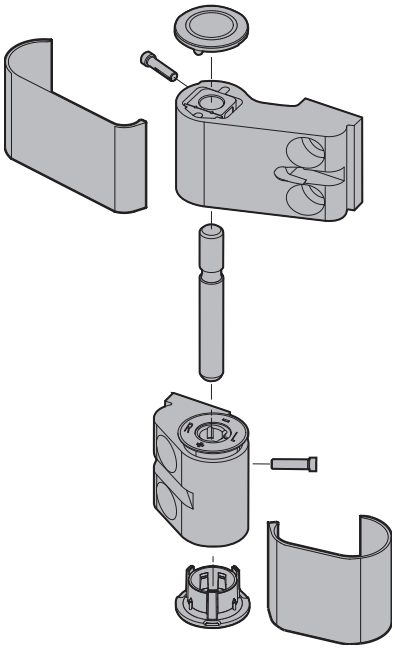

3D-PLUS Aluminium Door Hinges, 3-parts

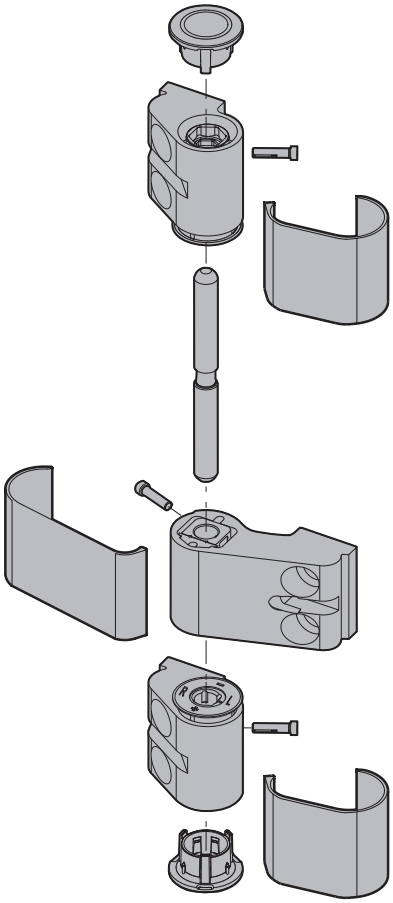

Adjustment

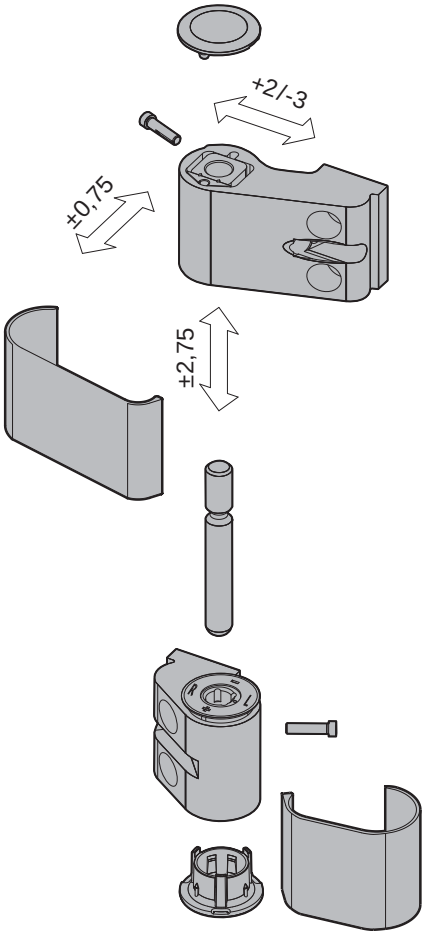

General Proposals for Door Hinges Configuration

- 3D-PLUS door hinges, center of rotation 23/36 mm

	Normal use		Intense use		Very intense use	
Object	EFH*		EFH* MFH**		Public buildings Schools, hospitals	
Accessories	—		Door closer Door coordinator device Door buffer		Door stay fasteners Rotary drive	
FB max. mm	< 1.000	1.000 - 1.300	< 1.000	1.000 - 1.300	< 1.000	1.000 - 1.300
Weight max. kg	120	150	160	180	160	180
Type	A	B	A	B	A	B
Hinge configuration	2 pieces	3 pieces	2 pieces	3 pieces	3 pieces	4 pieces
Leaf height min. 1.900 mm / max. 2.600 mm		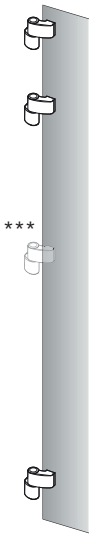		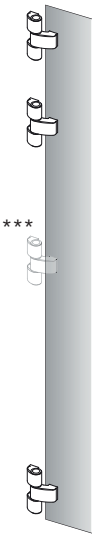	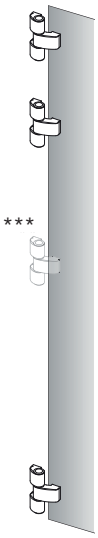	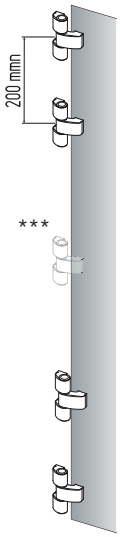

*EFH = Single-family house, **MFH = Apartment houses
*** Additional middle-hinge for leaf height >2.000 mm, on request.

Allowed maximum leaf weight FG

Leaf height FH		800	900	1.000	1.100	1.200	1.300
2.600	B	150	150	150	150	149	138
	A	120	120	120	—	—	—
2.500	B	150	150	150	150	144	132
	A	120	120	120	—	—	—
2.400	B	150	150	150	144	132	122
	A	120	120	120	—	—	—
2.300	B	150	150	150	144	132	122
	A	120	120	120	—	—	—
2.200	B	150	150	150	138	126	116
	A	120	120	120	—	—	—
2.100	B	150	150	145	131	120	111
	A	120	120	120	—	—	—
2.000	B	150	150	138	125	115	106
	A	120	120	120	—	—	—
1.900	B	150	145	131	118	109	100
	A	120	120	114	—	—	—
		Leaf width FB					

Allowed maximum leaf weight FG

Leaf height FH		800	900	1.000	1.100	1.200	1.300
2.600	B	180	180	180	180	180	180
	A	160	160	160	—	—	—
2.500	B	180	180	180	180	180	177
	A	160	160	160	—	—	—
2.400	B	180	180	180	180	180	170
	A	160	160	160	—	—	—
2.300	B	180	180	180	180	176	162
	A	160	160	160	—	—	—
2.200	B	180	180	180	180	169	155
	A	160	160	160	—	—	—
2.100	B	180	180	180	176	161	148
	A	160	160	160	—	—	—
2.000	B	180	180	180	167	153	141
	A	160	160	160	—	—	—
1.900	B	180	180	175	159	146	134
	A	160	160	152	—	—	—
		Leaf width FB					

Followings basics are deciding for an exact hinge configuration:
Profile system, leaf size, leaf weight, wall thickness of the profile, hinge fixation, opening of the door, type of use. To determine the allowed door sizes and weights, the guide lines and processing indications of the profile manufacturer must be respected! In this hinge configuration proposals a profile wall thickness of min. 1,8 mm was used as a basic. For technical request please contact WSS.

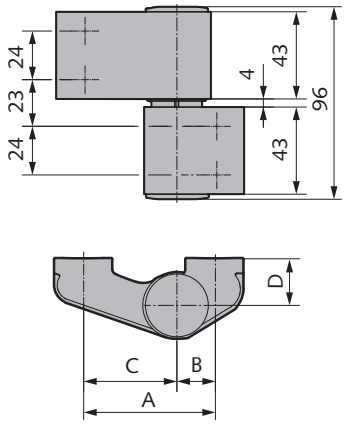

3D-PLUS door hinge, PLANAR, 2-parts

- stepless adjustable in three dimensions
- tested according to EN 1935, class 13
- leaf weight max. 150 kg*
- right/left usable (delivery right)
- screwable, maintenance free

Art.-N°	A	B	C	D
04.010.2365.---	65	19	46	23
04.010.2392.---	92	46	46	23
04.010.3665.---	65	19	46	36

Available surfaces:

---.114 Al E6/C-0 silver anodized
---.154 Al E6/C-34 dark bronze anodized
---.198 Al stainless steel finish
---.255 Al RAL 9016 traffic white powder coated
---.299 Al in special colour powder coated

Note:

Fixing material has to be ordered separately see page 14-15
Packaging unit = 2 pieces
* see proposals for hinge configuration page 5

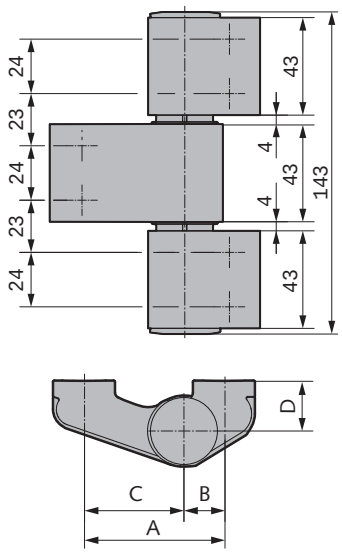

3D-PLUS door hinge, PLANAR, 3-parts

- stepless adjustable in three dimensions
- tested according to EN 1935, class 14
- leaf weight max. 180 kg*
- right/left usable (delivery right)
- screwable, maintenance free

Art.-N°	A	B	C	D
04.012.2365.---	65	19	46	23
04.012.2392.---	92	46	46	23
04.012.3665.---	65	19	46	36

Available surfaces:

---.114 Al E6/C-0 silver anodized
---.154 Al E6/C-34 dark bronze anodized
---.198 Al stainless steel finish
---.255 Al RAL 9016 traffic white powder coated
---.299 Al in special colour powder coated

Note:

Fixing material has to be ordered separately see page 14-15
Packaging unit = 2 pieces
* see proposals for hinge configuration page 5

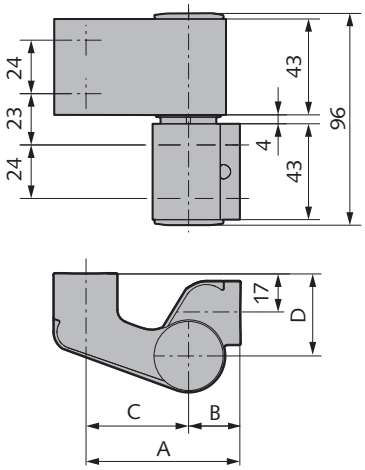

3D-PLUS door hinge, PLANAR, 2-parts, for pillar constructions

- stepless adjustable in three dimensions
- tested according to EN 1935, class 13
- leaf weight max. 150 kg*
- right/left usable (delivery right)
- screwable, maintenance free

Art.-N°	A	B	C	D
04.020.3669.---	69	23/36	46	36
04.020.3682.---	82	23/36	46	36

Available surfaces:

---.114 Al E6/C-0 silver anodized
---.154 Al E6/C-34 dark bronze anodized
---.198 Al stainless steel finish
---.255 Al RAL 9016 traffic white powder coated
---.299 Al in special colour powder coated

Note:
Fixing material has to be ordered separately see page 14-15
Packaging unit = 2 pieces
* see proposals for hinge configuration page 5

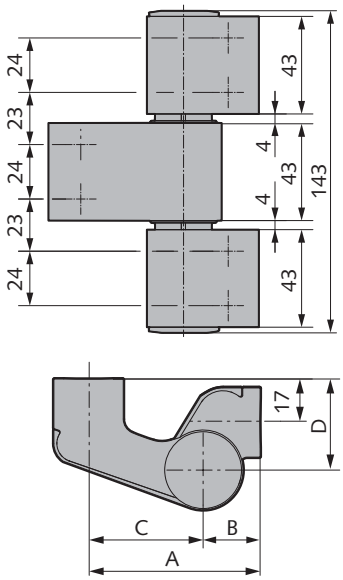

3D-PLUS door hinge, PLANAR, 2-parts, for pillar constructions

- stepless adjustable in three dimensions
- tested according to EN 1935, class 14
- leaf weight max. 180 kg*
- right/left usable (delivery right)
- screwable, maintenance free

Art.-N°	A	B	C	D
04.022.3669.---	69	23/36	46	36
04.022.3682.---	82	23/36	46	36

Available surfaces:

---.114 Al E6/C-0 silver anodized
---.154 Al E6/C-34 dark bronze anodized
---.198 Al stainless steel finish
---.255 Al RAL 9016 traffic white powder coated
---.299 Al in special colour powder coated

Note:
Fixing material has to be ordered separately see page 14-15
Packaging unit = 2 pieces
* see proposals for hinge configuration page 5

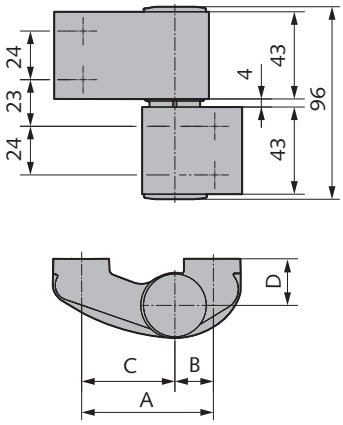

3D-PLUS door hinge, 2-parts

- stepless adjustable in three dimensions
- tested according to EN 1935, class 13
- leaf weight max. 150 kg*
- right/left usable (delivery right)
- screwable, maintenance free

Art.-N°	A	B	C	D
04.070.2365.---	65	19	46	23
04.070.2378.---	78	19	59	23
04.070.2392.---	92	46	46	23
04.070.2315.---	105	46	59	23
04.070.3665.---	65	19	46	36
04.070.3678.---	78	19	59	36

Available surfaces:

---.114 Al E6/C-0 silver anodized
---.154 Al E6/C-34 dark bronze anodized
---.198 Al stainless steel finish
---.255 Al RAL 9016 traffic white powder coated
---.299 Al in special colour powder coated

Note:

Fixing material has to be ordered separately see page 14-15
Packaging unit = 2 pieces
* see proposals for hinge configuration page 5

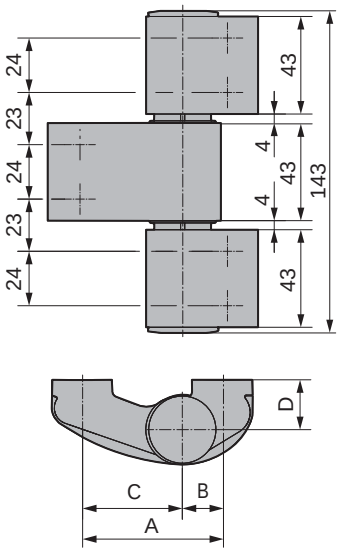

3D-PLUS door hinge, 3-parts

- stepless adjustable in three dimensions
- tested according to EN 1935, class 14
- leaf weight max. 180 kg*
- right/left usable (delivery right)
- screwable, maintenance free

Art.-N°	A	B	C	D
04.072.2365.---	65	19	46	23
04.072.2378.---	78	19	59	23
04.072.2392.---	92	46	46	23
04.072.2315.---	105	46	59	23
04.072.3665.---	65	19	46	36
04.072.3678.---	78	19	59	36

Available surfaces:

---.114 Al E6/C-0 silver anodized
---.154 Al E6/C-34 dark bronze anodized
---.198 Al stainless steel finish
---.255 Al RAL 9016 traffic white powder coated
---.299 Al in special colour powder coated

Note:

Fixing material has to be ordered separately see page 14-15
Packaging unit = 2 pieces
* see proposals for hinge configuration page 5

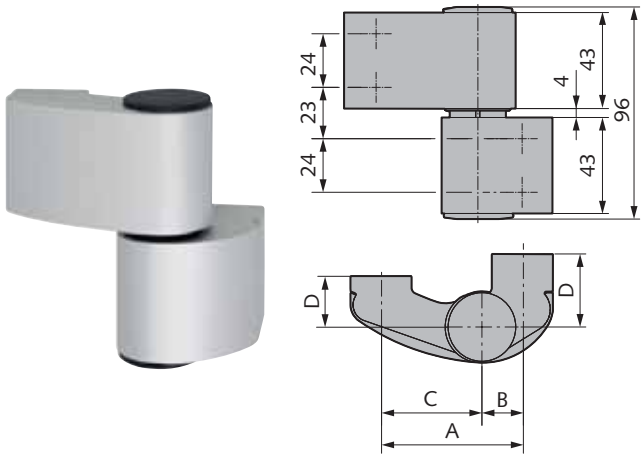

3D-PLUS door hinge, for 10 mm frame overlap, 2-parts

- stepless adjustable in three dimensions
- tested according to EN 1935, class 13
- leaf weight max. 150 kg*
- right/left usable (delivery right)
- screwable, maintenance free

Art.-N°	A	B	C	D
04.074.2365.---	65	19	46	23/33
04.074.2378.---	78	19	59	23/33

Available surfaces:

---.114 Al E6/C-0 silver anodized
---.154 Al E6/C-34 dark bronze anodized
---.198 Al stainless steel finish
---.255 Al RAL 9016 traffic white powder coated
---.299 Al in special colour powder coated

Note:
Fixing material has to be ordered separately see page 14-15
Packaging unit = 2 pieces
* see proposals for hinge configuration page 5

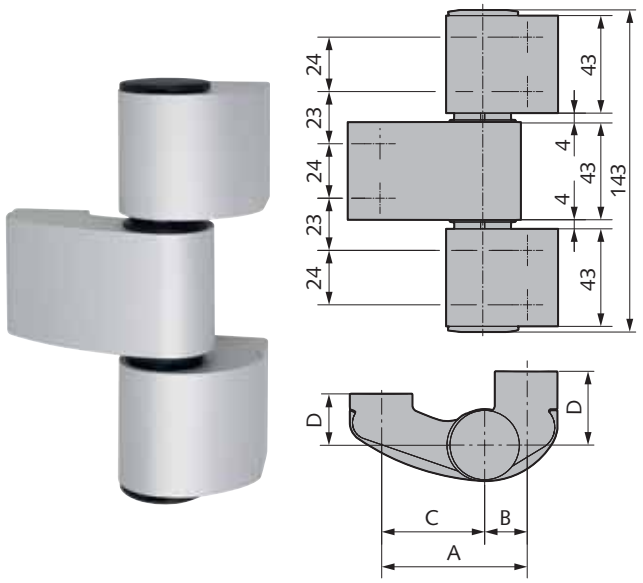

3D-PLUS door hinge, for 10 mm frame overlap, 3-parts

- stepless adjustable in three dimensions
- tested according to EN 1935, class 14
- leaf weight max. 180 kg*
- right/left usable (delivery right)
- screwable, maintenance free

Art.-N°	A	B	C	D
04.076.2365.---	65	19	46	23/33
04.076.2378.---	78	19	59	23/33

Available surfaces:

---.114 Al E6/C-0 silver anodized
---.154 Al E6/C-34 dark bronze anodized
---.198 Al stainless steel finish
---.255 Al RAL 9016 traffic white powder coated
---.299 Al in special colour powder coated

Note:
Fixing material has to be ordered separately see page 14-15
Packaging unit = 2 pieces
* see proposals for hinge configuration page 5

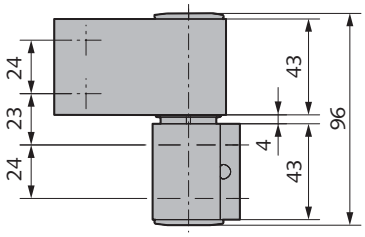

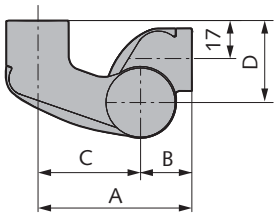

3D-PLUS door hinge, 2-parts, for pillar constructions

- stepless adjustable in three dimensions
- tested according to EN 1935, class 13
- leaf weight max. 150 kg*
- right/left usable (delivery right)
- screwable, maintenance free

Art.-N°	A	B	C	D
04.080.3669.---	69	23/36	46	36
04.080.3682.---	82	23/36	46	36

Available surfaces:

---.114 Al E6/C-0 silver anodized
---.154 Al E6/C-34 dark bronze anodized
---.198 Al stainless steel finish
---.255 Al RAL 9016 traffic white powder coated
---.299 Al in special colour powder coated

Note:

Fixing material has to be ordered separately see page 14-15
Packaging unit = 2 pieces
* see proposals for hinge configuration page 5

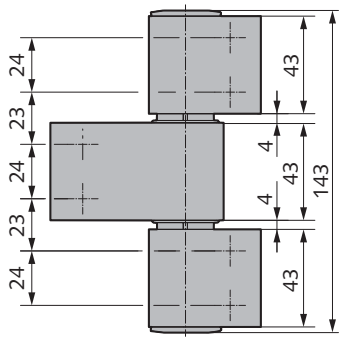

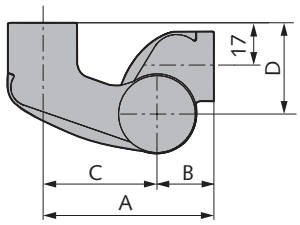

3D-PLUS door hinge, 3-parts, for pillar constructions

- stepless adjustable in three dimensions
- tested according to EN 1935, class 14
- leaf weight max. 180 kg*
- right/left usable (delivery right)
- screwable, maintenance free

Art.-N°	A	B	C	D
04.082.3669.---	69	23/36	46	36
04.082.3682.---	82	23/36	46	36

Available surfaces:

---.114 Al E6/C-0 silver anodized
---.154 Al E6/C-34 dark bronze anodized
---.198 Al stainless steel finish
---.255 Al RAL 9016 traffic white powder coated
---.299 Al in special colour powder coated

Note:

Fixing material has to be ordered separately see page 14-15
Packaging unit = 2 pieces
* see proposals for hinge configuration page 5

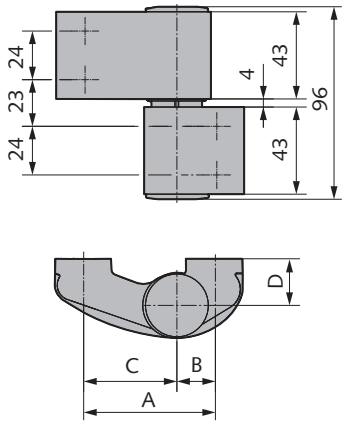

3D-PLUS door hinge, 2-parts, RC2

- with hardened stainless steel safety pin
- stepless adjustable in three dimensions
- tested according to EN 1935, class 13
- leaf weight max. 150 kg*
- right/left usable (delivery right)
- screwable, maintenance free

Art.-N°	A	B	C	D
04.030.2365.---	65	19	46	23
04.030.2378.---	78	19	59	23
04.030.2392.---	92	46	46	23
04.030.2315.---	105	46	59	23

Available surfaces:
---.114 Al E6/C-0 silver anodized
---.154 Al E6/C-34 dark bronze anodized
---.198 Al stainless steel finish
---.255 Al RAL 9016 traffic white powder coated
---.299 Al in special colour powder coated

Note:
Fixing material has to be ordered separately see page 14-15
Packaging unit = 2 pieces
* see proposals for hinge configuration page 5
** Please note the information about burglary resistant door hinges with RC/SKG classification.

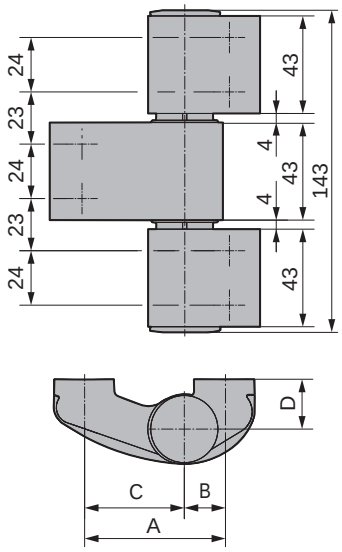

3D-PLUS door hinge, 3-parts, RC2

- with hardened stainless steel safety pin
- stepless adjustable in three dimensions
- tested according to EN 1935, class 14
- leaf weight max. 180 kg*
- right/left usable (delivery right)
- screwable, maintenance free

Art.-N°	A	B	C	D
04.032.2365.---	65	19	46	23
04.032.2378.---	78	19	59	23
04.032.2392.---	92	46	46	23
04.032.2315.---	105	46	59	23

Available surfaces:
---.114 Al E6/C-0 silver anodized
---.154 Al E6/C-34 dark bronze anodized
---.198 Al stainless steel finish
---.255 Al RAL 9016 traffic white powder coated
---.299 Al in special colour powder coated

Note:
Fixing material has to be ordered separately see page 14-15
Packaging unit = 2 pieces
* see proposals for hinge configuration page 5
** Please note the information about burglary resistant door hinges with RC/SKG classification.

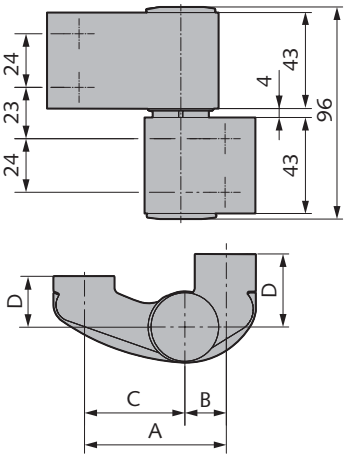

3D-PLUS door hinge, 2-parts, RC2, for 10 mm frame overlap

- with hardened stainless steel safety pin
- stepless adjustable in three dimensions
- tested according to EN 1935, class 13
- leaf weight max. 150 kg*
- right/left usable (delivery right)
- screwable, maintenance free

Art.-N°	A	B	C	D
04.036.2365.---	65	19	49	23/33
04.036.2378.---	78	19	59	23/33

Available surfaces:

---.114 Al E6/C-0 silver anodized
---.154 Al E6/C-34 dark bronze anodized
---.198 Al stainless steel finish
---.255 Al RAL 9016 traffic white powder coated
---.299 Al in special colour powder coated

Note:

Fixing material has to be ordered separately see page 14-15
Packaging unit = 2 pieces
* see proposals for hinge configuration page 5
** Please note the information about burglary resistant door hinges with RC/SKG classification.

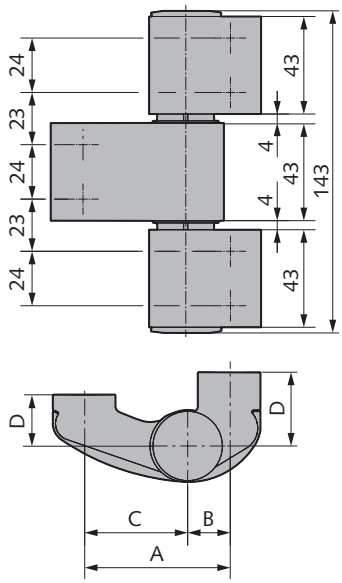

3D-PLUS door hinge, 3-parts, RC2, for 10 mm frame overlap

- with hardened stainless steel safety pin
- stepless adjustable in three dimensions
- tested according to EN 1935, class 13
- leaf weight max. 180 kg*
- right/left usable (delivery right)
- screwable, maintenance free

Art.-N°	A	B	C	D
04.038.2365.---	65	19	49	23/33
04.038.2378.---	78	19	59	23/33

Available surfaces:

---.114 Al E6/C-0 silver anodized
---.154 Al E6/C-34 dark bronze anodized
---.198 Al stainless steel finish
---.255 Al RAL 9016 traffic white powder coated
---.299 Al in special colour powder coated

Note:

Fixing material has to be ordered separately see page 14-15
Packaging unit = 2 pieces
* see proposals for hinge configuration page 5
** Please note the information about burglary resistant door hinges with RC/SKG classification.

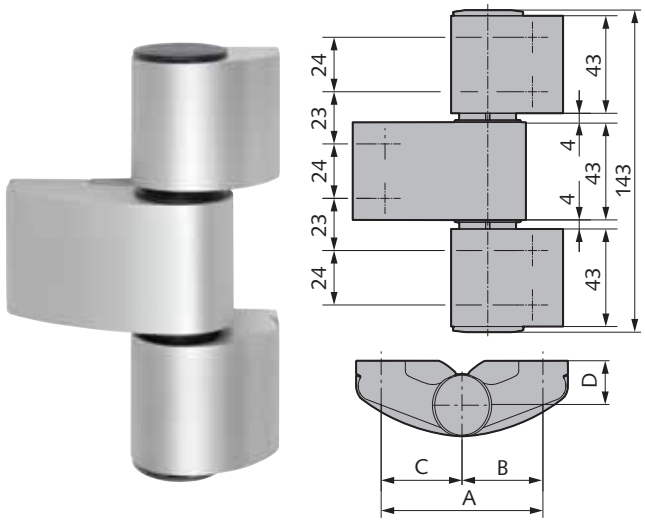

3D-PLUS door hinge, 3-parts, RC3

- with hardened stainless steel safety pin
- stepless adjustable in three dimensions
- tested according to EN 1935, class 14
- leaf weight max. 180 kg*
- right/left usable (delivery right)
- screwable, maintenance free
- with interlocking anti-jemmy

Art.-N°	A	B	C	D
04.040.2365.---	65	19	46	23
04.040.2392.---	92	46	46	23

Available surfaces:

---.114 Al E6/C-0 silver anodized
---.154 Al E6/C-34 dark bronze anodized
---.198 Al stainless steel finish
---.255 Al RAL 9016 traffic white powder coated
---.299 Al in special colour powder coated

Note:

Fixing material has to be ordered separately see page 14-15
Packaging unit = 2 pieces
* see proposals for hinge configuration page 5
** Please note the information about burglary resistant door hinges with RC/SKG classification.

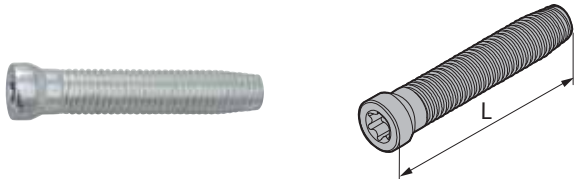

Direct fixation with fixing screw

Art.-N°	L	Material/Surface
04.090.1061.405	61	304 mill finish
04.090.1068.010	68	St galvanized
04.090.1078.010	78	St galvanized
04.090.1088.010	88	St galvanized

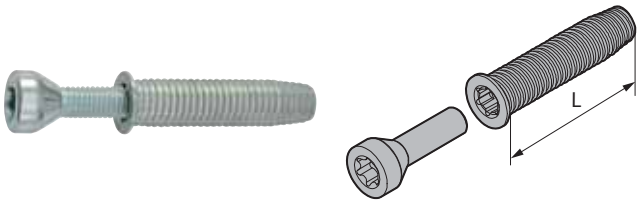

Mounting kit anchor nut

for 2-parts hinges

Set consists of:
- 4x anchor nut
- 4x countersunk screw

Art.-N°	L	Material/Surface
04.094.0050.010	50	St galvanized
04.094.0060.010	60	St galvanized

for 3-parts hinges

Set consists of:
- 6x anchor nut
- 6x countersunk screw

Art.-N°	L	Material/Surface
04.095.0050.010	50	St galvanized
04.095.0060.010	60	St galvanized

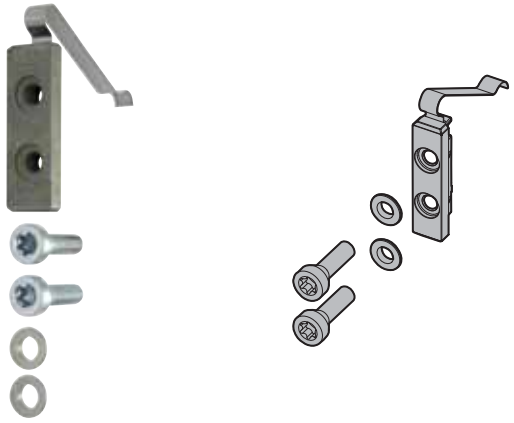

Mounting kit counter plate

for 2-parts hinges

Set consists of:
- 2x counter plate 20 mm wide
- 4x countersunk screw
- 4x guide bushing

Art.-N°	Material/Surface
04.097.0000.010	St galvanized

for 3-parts hinges

Set consists of:
- 3x counter plate 20 mm wide
- 6x countersunk screw
- 6x guide bushing

Art.-N°	Material/Surface
04.098.0000.010	St galvanized

Anchor nut

Art.-N°	L	Material/Surface
04.091.0050.010	50	St galvanized
04.091.0060.010	60	St galvanized

Countersunk screw

- M8 x 34

Art.-N°	Material/Surface
04.092.0000.012	St gelb chromatiert
04.092.0000.405	304 mill finish

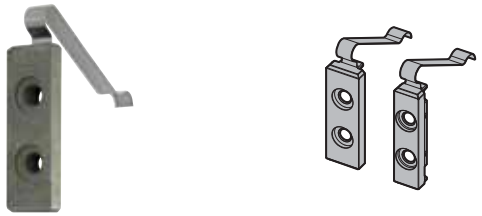

Counter plate with spring

Art.-N°	Dimension	Material/Surface
04.110.0015.780	60 x 15 x 12	Zinc cast yellow passivated
04.110.0020.780	60 x 20 x 12	Zinc cast yellow passivated

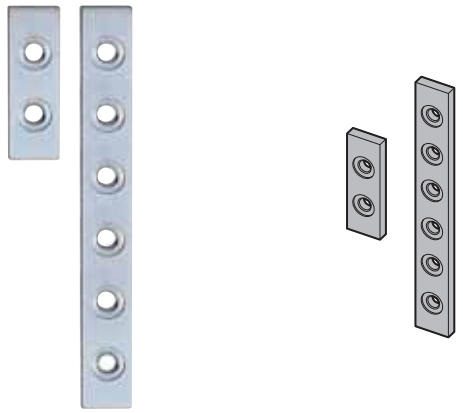

Counter plate for 2- and 3-parts hinges

Art.-N°	Dimension	Material/Surface
04.110.6015.010	60 x 15 x 6	St galvanized
04.110.6020.010	60 x 20 x 6	St galvanized
04.110.1540.010	154 x 20 x 6	St galvanized
04.110.1545.010	154 x 15 x 6	St galvanized

Guide bushing

- for hinge part when using countersunk screw

Art.-N°	Material/Surface
04.111.0000.405	304 mill finish

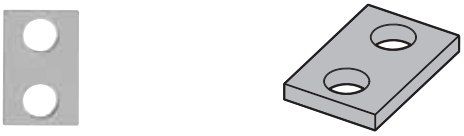

Spacer for frame overlap

3 mm plate thickness

Art.-N°
04.109.0003.---

5 mm plate thickness

Art.-N°
04.109.0005.---

Available surfaces:

---.114 Al E6/C-0 silver anodized
---.154 Al E6/C-34 dark bronze anodized
---.198 Al stainless steel finish
---.255 Al RAL 9016 traffic white powder coated
---.299 Al in special colour powder coated

Note:
Base plate only for direct fixing and screw inserts.

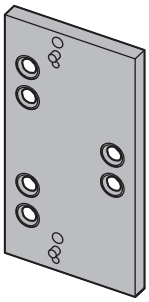

Drilling jig for in- and out wards opening doors, 65/78 mm

- for shadow groove 5/6/8 mm

Art.-N°	A	Material/Surface
04.112.0065.105	65	Al mill finish
04.112.0078.105	78	Al mill finish

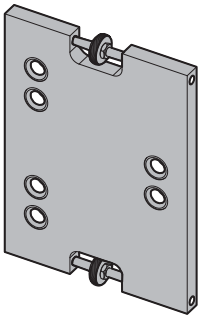

Drilling jig for in- and out wards opening doors, 92/105 mm

- for shadow groove 5/6/8 mm

Art.-N°	A	Material/Surface
04.112.0092.105	92	Al mill finish
04.112.0105.105	105	Al mill finish

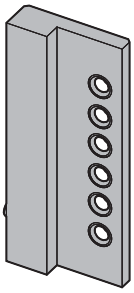

Drilling jig for post constructions

Art.-N°	Shadow groove	Material/Surface
04.112.0005.105	5	Al mill finish
04.112.0006.105	6	Al mill finish
04.112.0008.105	8	Al mill finish

Adapter SW10/14

- for adjustment of height and sealing pressure

Art.-N°	Material/Surface
04.115.0001.705	Zinc cast raw

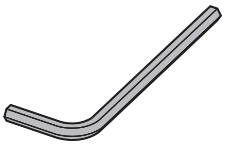

Allen key SW2,5

- for tightening of fixing screw

Art.-N°	Material/Surface
04.115.0010.005	St bright

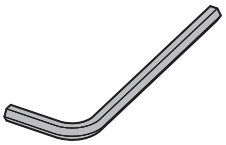

Allen key SW5

- for tightening of fixing screw

Art.-N°	Material/Surface
04.115.0011.005	St bright

TORX T50 Bit

Art.-N°	Material/Surface
04.119.0011.005	St bright

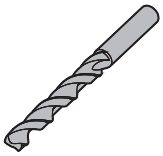

Drill

Art.-N°	Execution	Material/Surface
04.116.0020.005	Bohrer Ø11	St bright

2D Aluminium Door Hinges for Light Alloy Doors

- adjustment by excentric bush ±1,5 mm
- adjustment of shadow flute and pressure without lift-out of door
- height adjustment by compensation plates
- right/left usable due to fast retrofitting

2D Aluminium Door Hinges, 2-parts

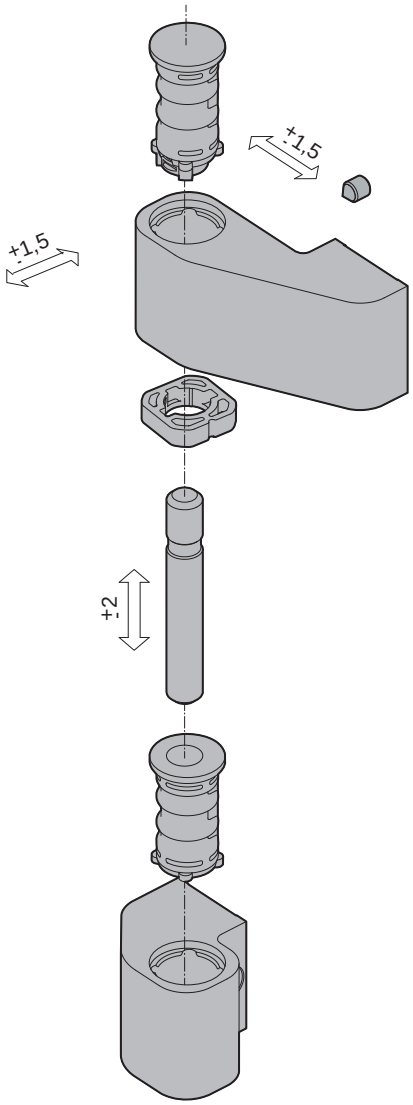

2D Aluminium Door Hinges, 3-parts

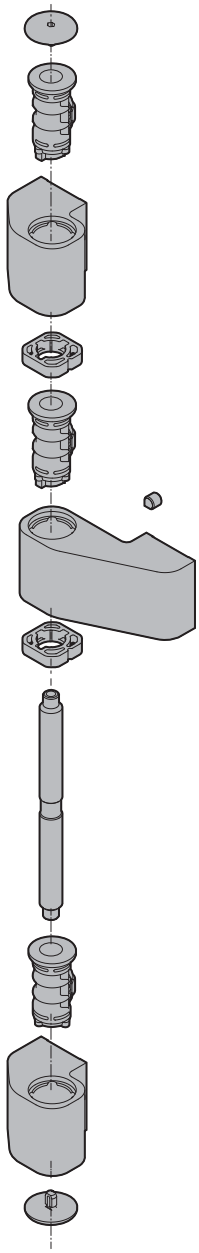

General Proposals for Door Hinges Configuration

2D Aluminium door hinges, center of rotation 25/36 mm

Object	EFH*	EFH*	EFH* MFH**	EFH* MFH**	MFH**		Public buildings, Schools, Hospitals	Public buildings, Schools, Hospitals	Public buildings, Schools, Hospitals	Public buildings, Schools, Hospitals
Accessories	–	–	–	–	Door closer Automatic mode		–	–	Door closer Door coordinator device Automatic mode	
FB max. mm	1.000	1.001 - 1.250	1.000	1.001 - 1.250	1.000	1.001 - 1.250	1.000	1.001 - 1.250	1.000	1.001 - 1.250
Leaf weight max. kg	75	75	100	100	100	80	100	80	80	80
Hinge configuration	2 pieces	3 pieces	2 pieces	3 pieces		3 pieces	3 pieces			4 pieces
Leaf height min. 2.000 / max. 2.500 mm	***	***	***	***		***	200 mm ***			

*EFH = Single-family house, **MFH = Apartment houses

*** Additional middle-hinge for leaf height >2.000 mm, on request.

Followings basics are deciding for an exact hinge configuration:
Profile system, leaf size, leaf weight, wall thickness of the profile, hinge fixation, opening of the door, type of use. To determine the allowed door sizes and weights, the guide lines and processing indications of the profile manufacturer must be respected!
For technical request please contact WSS.

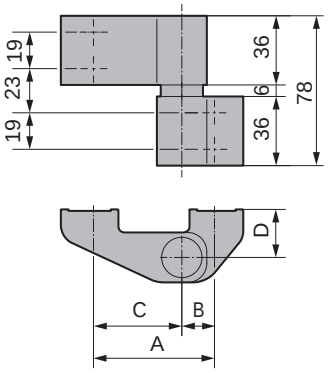

2D aluminium door hinge, 2-parts

- stepless adjustable in two dimensions
- right/left usable (delivery right)
- screwable, maintenance free

Art.-N°	A	B	C	D
04.150.2563.---	63	17	46	25
04.150.2578.---	78	17	61	25
04.150.2592.---	92	46	46	25
04.150.3663.---	63	17	46	36
04.150.3678.---	78	17	61	36
04.150.3692.---	92	46	46	36

Available surfaces:

---.114 Al E6/C-0 silver anodized
---.154 Al E6/C-34 dark bronze anodized
---.198 Al stainless steel finish
---.255 Al RAL 9016 traffic white powder coated
---.299 Al in special colour powder coated

Accessories:

Without any further specifications, WSS supplies the hinges pre-assembled in right handed version and with the following standard-accessories:
counter plates Art.-N° 04.180.0300.705
fixing screws Art.-N° 04.170.0017.010

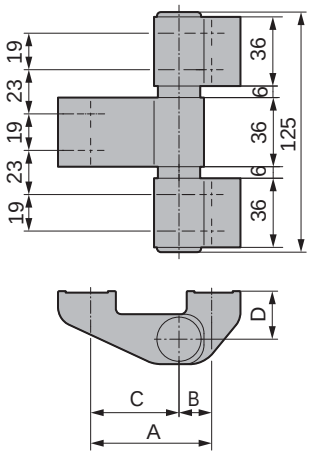

2D aluminium door hinge, 3-parts

- stepless adjustable in two dimensions
- right/left usable (delivery right)
- screwable, maintenance free

Art.-N°	A	B	C	D
04.152.2563.---	63	17	46	25
04.152.2578.---	78	17	61	25
04.152.2592.---	92	46	46	25
04.152.3663.---	63	17	46	36
04.152.3678.---	78	17	61	36
04.152.3692.---	92	46	46	36

Available surfaces:

---.114 Al E6/C-0 silver anodized
---.154 Al E6/C-34 dark bronze anodized
---.198 Al stainless steel finish
---.255 Al RAL 9016 traffic white powder coated
---.299 Al in special colour powder coated

Accessories:

Without any further specifications, WSS supplies the hinges pre-assembled in right handed version and with the following standard-accessories:
counter plates Art.-N° 04.180.0300.705
fixing screws Art.-N° 04.170.0017.010

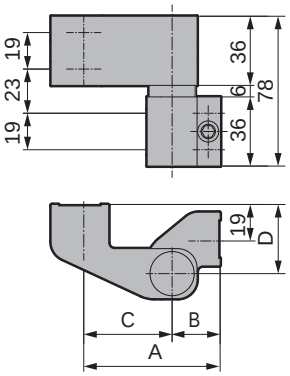

2D aluminium door hinge 2-parts, for pillar constructions

- stepless adjustable in two dimensions
- right/left usable (delivery right)
- screwable, maintenance free

Art.-N°	A	B	C	D
04.154.3671.---	71	25	46	36

Available surfaces:
---.114 Al E6/C-0 silver anodized
---.154 Al E6/C-34 dark bronze anodized
---.250 Al RAL 9010 pure white powder coated
---.255 Al RAL 9016 traffic white powder coated
---.299 Al in special colour powder coated

Accessories:
Without any further specifications, WSS supplies the hinges pre-assembled in right handed version and with the following standard-accessories:
counter plates Art.-N° 04.180.0300.705
fixing screws Art.-N° 04.170.0017.010

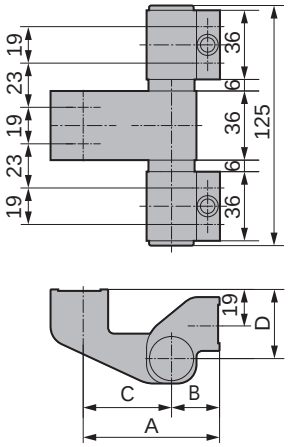

2D aluminium door hinge 3-parts, for pillar constructions

- stepless adjustable in two dimensions
- right/left usable (delivery right)
- screwable, maintenance free

Art.-N°	A	B	C	D
04.156.3671.---	71	25	46	36

Available surfaces:
---.105 Al mill finish
---.114 Al E6/C-0 silver anodized
---.198 Al stainless steel finish
---.255 Al RAL 9016 traffic white powder coated
---.299 Al in special colour powder coated

Accessories:
Without any further specifications, WSS supplies the hinges pre-assembled in right handed version and with the following standard-accessories:
counter plates Art.-N° 04.180.0300.705
fixing screws Art.-N° 04.170.0017.010

Counter plate, fixing holes centric

Art.-N°	Dimension	Material/Surface
04.174.0100.010	60 x 20 x 6	St galvanized

Counter plate, fixing holes excentric

Art.-N°	Dimension	Material/Surface
04.176.0200.010	60 x 20 x 6	St galvanized

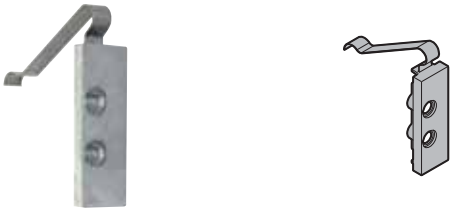

Counter plate with spring

- fixing holes excentric

Art.-N°	Dimension	Material/Surface
04.182.0400.705	60 x 20 x 12	Zinc cast raw

Counter plate with spring

- fixing holes centric

Art.-N°	Dimension	Material/Surface
04.180.0300.705	60 x 20 x 12	Zinc cast raw

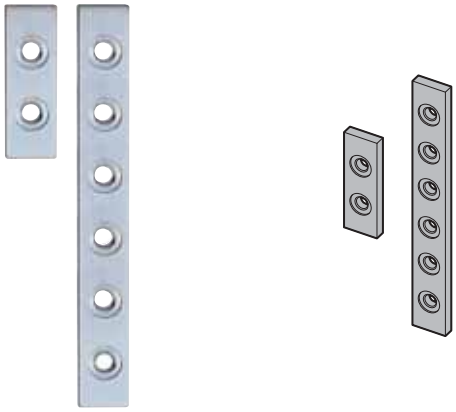

Counter plate for 2- and 3-parts hinges

Art.-N°	Dimension	Material/Surface
04.206.0145.010	145 x 20 x 6	St galvanized

Fixing screw

- standard
- thread length = 17 mm

Art.-N°	Material/Surface
04.170.0017.010	St galvanized

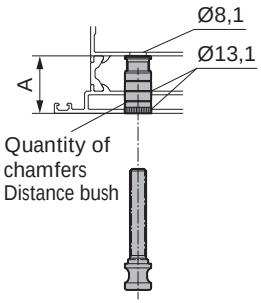

Distance bush with screw

- for outside fastening

Art.-N°	A	Quantity of chamfers	Material/Surface
04.172.1316.010	13 to < 16	1	St galvanized
04.172.1623.010	16 to < 23	2	St galvanized
04.172.2330.010	23 to < 30	3	St galvanized
04.172.3037.010	30 to < 37	4	St galvanized
04.172.3744.010	37 to < 44	5	St galvanized
04.172.4451.010	44 to < 52	6	St galvanized

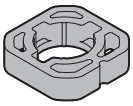

Plastic shim

- for height adjustment
- exchangeable for 6 mm adjustment washer

Art.-N°	Height	Execution	Material/Surface
04.200.0400.565	4	to leaf sunk	Plastic black
04.200.0500.565	5	to leaf sunk	Plastic black
04.200.0600.565	6	standard-equipment	Plastic black
04.200.0700.565	7	to leaf lift	Plastic black
04.200.0800.565	8	to leaf lift	Plastic black

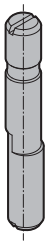

Axis, excentric

- 1 mm displaced axis

Art.-N°	Material/Surface
04.202.0100.405	304 mill finish

Note:
For further adjustment of shadow flute and pressure of 2-part door hinge.

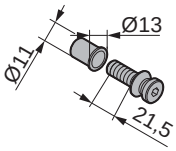

Fixing unit

- for belated hinge installation to already built-in doors

Art.-N°	Material/Surface
04.204.0100.010	St galvanized
04.204.0100.405	304 mill finish

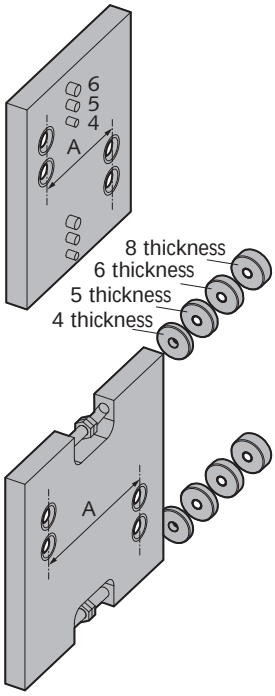

Drilling jig, 2-parts

- for in- and outwards opening doors

Art.-N°	A	Shadow groove	Material/Surface
04.210.0263.105	63	4/5/6	Al mill finish
04.210.0278.105	78	4/5/6	Al mill finish
04.210.4292.105	92	4/5/6/8	Al mill finish

Accessories:
For inward opening doors
drill Art.-N° 04.228.0050.005
For outward opening doors:
drill Art.-N° 04.228.0050.005
counterbore Art.-N° 04.230.0060.005

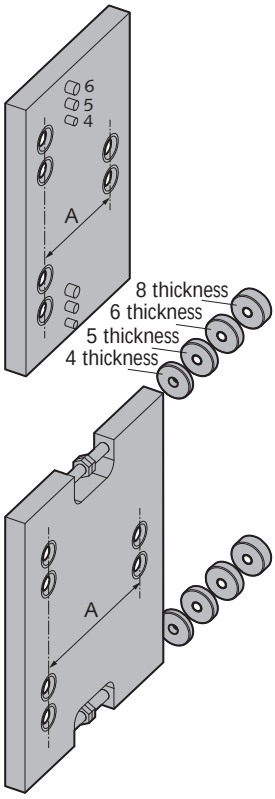

Drilling jig, 3-parts

- for in- and outwards opening doors

Art.-N°	A	Shadow groove	Material/Surface
04.212.0363.105	63	4/5/6	Al mill finish
04.212.0378.105	78	4/5/6	Al mill finish
04.212.4392.105	92	4/5/6/8	Al mill finish

Accessories:
For inward opening doors
drill Art.-N° 04.228.0050.005
For outward opening doors:
drill Art.-N° 04.228.0050.005
counterbore Art.-N° 04.230.0060.005

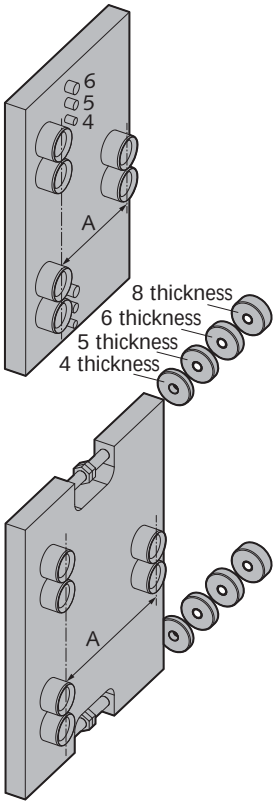

Drilling jig, 2- and 3-parts

- for outward opening doors

Art.-N°	A	Shadow groove	Material/Surface
04.214.0363.105	63	4/5/6	Al mill finish
04.214.0378.105	78	4/5/6	Al mill finish
04.214.4392.105	92	4/5/6/8	Al mill finish

Accessories:
For outward opening doors:
step drill Art.-N° 04.232.0070.005

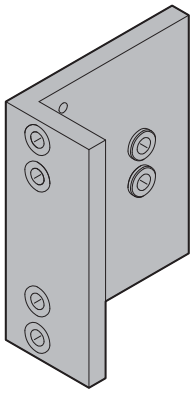

Drilling jig for post constructions

- for 2- and 3-parts door hinges

Art.-N°	Material/Surface
04.216.0100.105	Al mill finish

Accessories:
For inward opening doors
drill Art.-N° 04.228.0050.005
For outward opening doors:
drill Art.-N° 04.228.0050.005
counterbore Art.-N° 04.230.0060.005

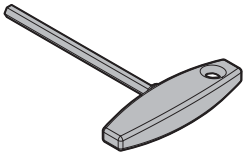

Allen key SW6

- for fixing of clamping screw

Art.-N°	Material/Surface
04.220.0010.000	000

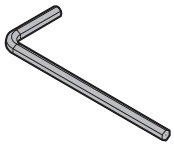

Allen key SW3

- for fastening of hinge axis

Art.-N°	Material/Surface
04.222.0020.005	St bright

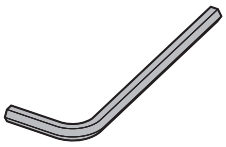

Allen key SW5

- for tightening of fixing screw

Art.-N°	Material/Surface
04.115.0011.005	St bright

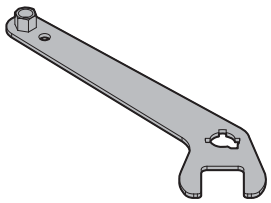

Adjustment key

- for adjustment of shadow groove and sealing pressure

Art.-N°	Material/Surface
04.224.0030.000	000

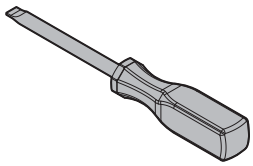

Screwdriver

- for height adjustment of the distance bushes for outside fastening

Art.-N°	Material/Surface
04.226.0040.000	000

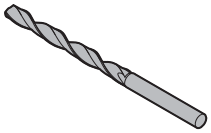

Drill Ø 8,1

- for drilling jigs inwards/outwards

Art.-N°	Material/Surface
04.228.0050.005	St bright

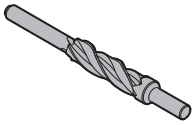

Counterbore Ø 8,1 - Ø 13,1mm

- with pin Ø 8,1, length 47 mm
- for outward opening doors with distance bushes

Art.-N°	Material/Surface
04.230.0060.005	St bright

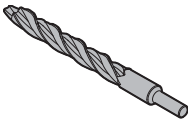

Step drill Ø 8,1 - Ø 13,1mm

- for outward opening doors with distance bushes (only one work-step necessary)

Art.-N°	Material/Surface
04.232.0070.005	St bright

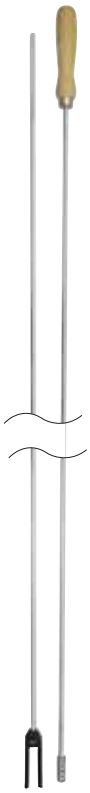
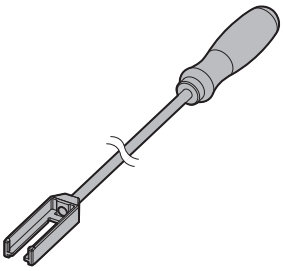

Assembling stick

- for insertion of counter plates

Art.-N°	Material/Surface
04.118.0041.000	000

Aluminium Door Hinges for Light Alloy Doors

- adjustment by excentric bush ±0,75 mm
- low center of rotation = 18 mm
- right/left usable due to fast retrofitting

Aluminium Door Hinges, 2-parts

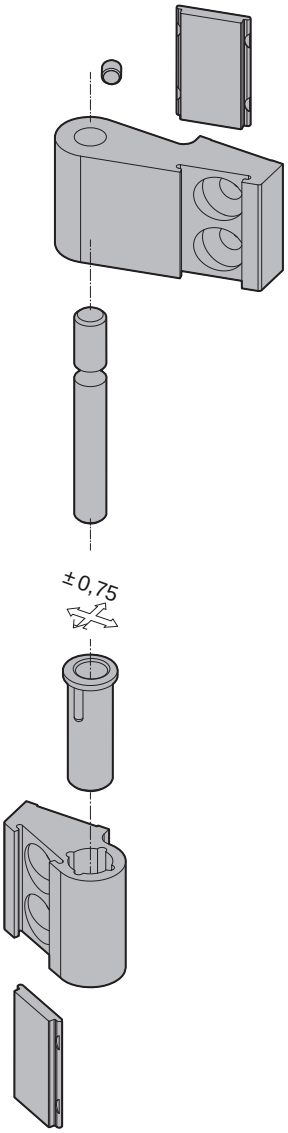

Aluminium Door Hinges, 3-parts

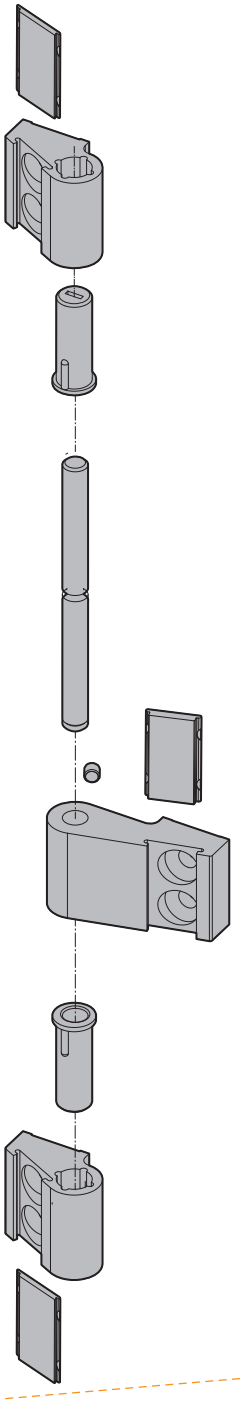

General Proposals for Door Hinges Configuration

Aluminium door hinges, center of rotation 18 mm

Object	EFH*	EFH*	EFH* MFH**	EFH* MFH**	MFH**		Public buildings, Schools, Hospitals	Public buildings, Schools, Hospitals	Public buildings, Schools, Hospitals	Public buildings, Schools, Hospitals
Accessories	–	–	–	–	Door closer Automatic mode		–	–	Door closer Door coordinator device Automatic mode	
FB max. mm	1.000	1.001 - 1.250	1.000	1.001 - 1.250	1.000	1.001 - 1.250	1.000	1.001 - 1.250	1.000	1.001 - 1.250
Leaf weight max. kg	75	75	100	100	100	80	100	80	80	80
Hinge configuration	2 pieces	3 pieces	2 pieces	3 pieces		3 pieces	3 pieces			4 pieces
Leaf height min. 2.000 / max. 2.500 mm	***	***	***	***		***	***	200 mm		

*EFH = Single-family house, **MFH = Apartment houses

*** Additional middle-hinge for leaf height >2.000 mm, on request.

Followings basics are deciding for an exact hinge configuration:
Profile system, leaf size, leaf weight, wall thickness of the profile, hinge fixation, opening of the door, type of use. To determine the allowed door sizes and weights, the guide lines and processing indications of the profile manufacturer must be respected! For technical request please contact WSS.

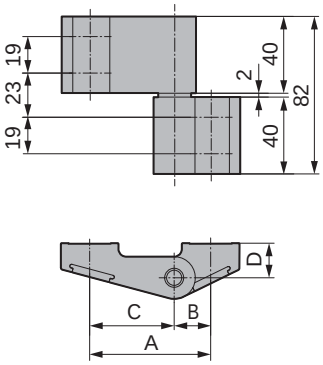

Aluminium door hinge, 2-parts

- with sliding cover
- right/left usable (delivery right)

Art.-N°	A	B	C	D	Material/Surface
04.250.1863.114	63	19	44	18	Al E6/C-0 silver anod.
04.250.1863.154	63	19	44	18	Al E6/C-34 dark bronze anod.
04.250.1863.198	63	19	44	18	Al stainless steel finish
04.250.1863.255	63	19	44	18	Al RAL 9016 powder coat
04.250.1863.299	63	19	44	18	Al special colour powder coat

Accessories:
Without any further specifications, WSS supplies the hinges pre-assembled in right handed version and with the following standard-accessories:
counter plates Art.-N° 04.180.0300.705
fixing screws Art.-N° 04.254.0028.010

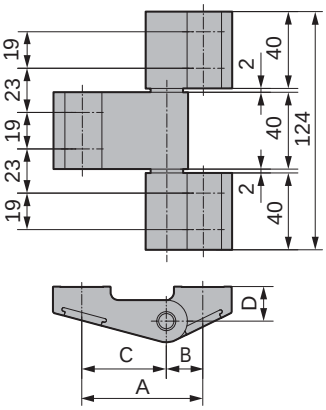

Aluminium door hinge, 3-parts

- with sliding cover
- right/left usable (delivery right)

Art.-N°	A	B	C	D	Material/Surface
04.252.1863.114	63	19	44	18	Al E6/C-0 silver anod.
04.252.1863.154	63	19	44	18	Al E6/C-34 dark bronze anod.
04.252.1863.198	63	19	44	18	Al stainless steel finish
04.252.1863.255	63	19	44	18	Al RAL 9016 powder coat
04.252.1863.299	63	19	44	18	Al special colour powder coat

Accessories:
Without any further specifications, WSS supplies the hinges pre-assembled in right handed version and with the following standard-accessories:
counter plates Art.-N° 04.180.0300.705
fixing screws Art.-N° 04.254.0028.010

Fixing screw

Art.-N°	GL	Material/Surface
04.254.0028.010	M8 x 28	St galvanized
04.254.0050.010	M8 x 50	St galvanized

Counter plate, fixing holes centric

Art.-N°	Dimension	Material/Surface
04.174.0100.010	60 x 20 x 6	St galvanized

Counter plate, fixing holes excentric

Art.-N°	Dimension	Material/Surface
04.176.0200.010	60 x 20 x 6	St galvanized

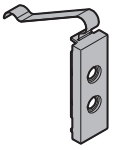

Counter plate with spring

- fixing holes centric

Art.-N°	Dimension	Material/Surface
04.180.0300.705	60 x 20 x 12	Zinc cast raw

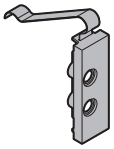

Counter plate with spring

- fixing holes excentric

Art.-N°	Dimension	Material/Surface
04.182.0400.705	60 x 20 x 12	Zinc cast raw

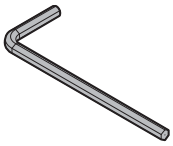

Allen key SW3

- for fastening of hinge axis

Art.-N°	Material/Surface
04.222.0020.005	St bright

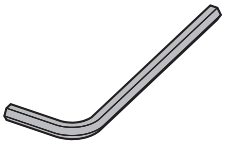

Allen key SW5

- for tightening of fixing screw

Art.-N°	Material/Surface
04.115.0011.005	St bright

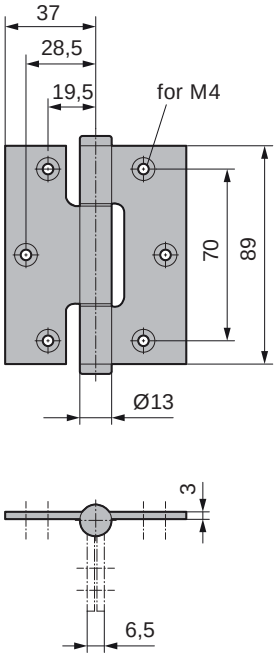

Aluminium door hinge, 3-parted

- with stainless steel pin and nylon spacer ring
- right/left usable

Art.-N°
04.270.0089.---

Available surfaces:

---.114 Al E6/C-0 silver anodized
---.154 Al E6/C-34 dark bronze anodized
---.255 Al RAL 9016 traffic white powder coated
---.299 Al in special colour powder coated

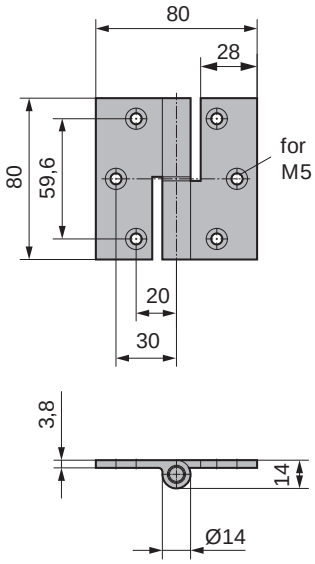

Illustration shows figure right

Aluminium door hinge, 2-parted

- with stainless steel pin and nylon spacer ring

Art.-N°	Direction
04.272.0080.---	right
04.273.0080.---	left

Available surfaces:

---.114 Al E6/C-0 silver anodized
---.154 Al E6/C-34 dark bronze anodized
---.255 Al RAL 9016 traffic white powder coated
---.299 Al in special colour powder coated

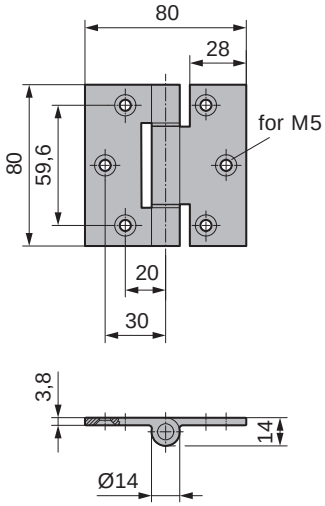

Aluminium door hinge, 3-parted

- with stainless steel pin and nylon spacer ring
- right/left usable

Art.-N°
04.274.0080.---

Available surfaces:

---.114 Al E6/C-0 silver anodized
---.154 Al E6/C-34 dark bronze anodized
---.255 Al RAL 9016 traffic white powder coated
---.299 Al in special colour powder coated

Steel-/Stainless Steel Door Hinges

- adjustment by excentric bush ±1 mm
- adjustment of shadow flute and pressure without lift-out of door
- right/left usable due to fast retrofitting

Steel-/Stainless Steel Door Hinges, 2-parts

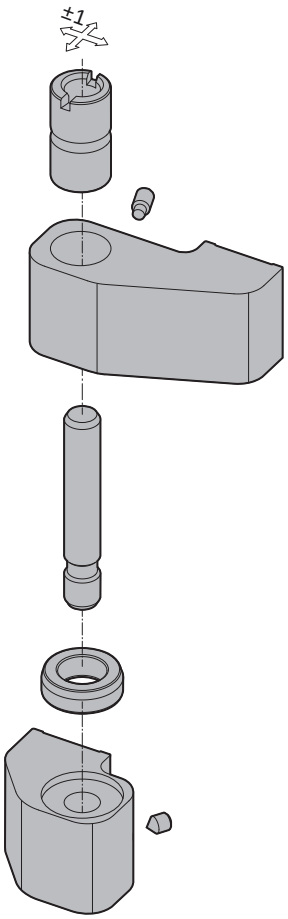

Steel-/Stainless Steel Door Hinges, 3-parts

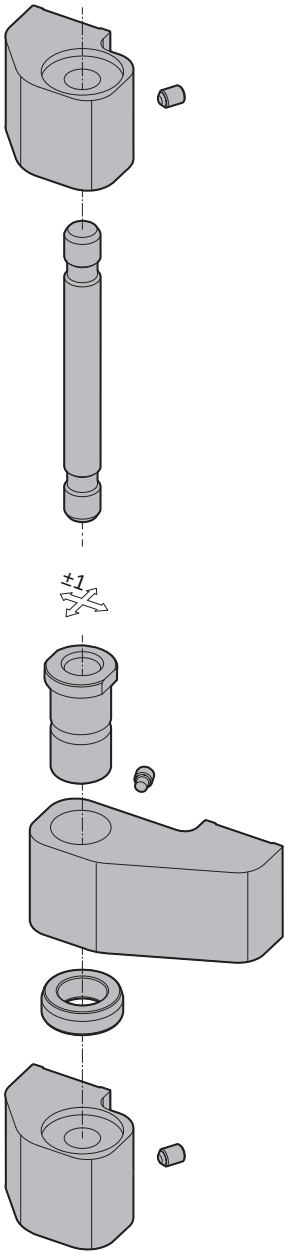

General Proposals for Door Hinges Configuration

- steel door hinges, center of rotation 25/36 mm
- stainless steel door hinges, center of rotation 25 mm

Object	EFH*	EFH*	EFH* MFH**	EFH* MFH**	MFH**		Public buildings, Schools, Hospitals	Public buildings, Schools, Hospitals	Public buildings, Schools, Hospitals	Public buildings, Schools, Hospitals
Accessories	–	–	–	–	Door closer Automatic mode		–	–	Door closer Door coordinator device Automatic mode	
FB max. mm	1.000	1.001 - 1.250	1.000	1.001 - 1.250	1.000	1.001 - 1.250	1.000	1.001 - 1.250	1.000	1.001 - 1.250
Leaf weight max. kg	120	120	160	160	160	120	160	120	120	120
Hinge configuration	2 pieces	3 pieces	2 pieces	3 pieces		3 pieces	3 pieces			4 pieces
Leaf height min. 2.000 / max. 2.500 mm	***	***	***	***		***	200 mm ***			

*EFH = Single-family house, **MFH = Apartment houses

*** Additional middle-hinge for leaf height >2.000 mm, on request.

Followings basics are deciding for an exact hinge configuration:
Profile system, leaf size, leaf weight, wall thickness of the profile, hinge fixation, opening of the door, type of use. To determine the allowed door sizes and weights, the guide lines and processing indications of the profile manufacturer must be respected!
For technical request please contact WSS.

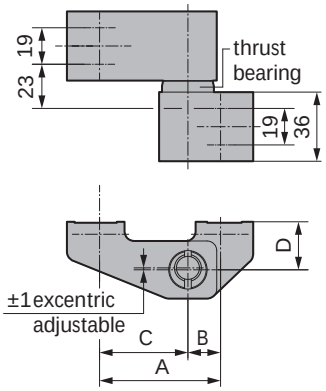

Steel door hinge, 2-parts

- incl. fixing material
- right/left usable (delivery right)
- adjustable via excentric bush
- tested according to EN 1935

Art.-N°	A	B	C	D
04.300.2563.---	63	17	46	25
04.300.2592.---	92	46	46	25
04.300.3663.---	63	17	46	36
04.300.3692.---	92	46	46	36

Available surfaces:
---.010 St galvanized
---.055 St RAL 9016 traffic white powder coated
---.099 St in special finish

Accessories:
Without any further specifications, WSS supplies the hinges pre-assembled in right handed version and with the following standard-accessories:
counter plates Art.-N° 04.350.6030.010
fixing screws Art.-N° 04.345.0025.010

Special version:
Door hinges also available for profiles with section measurement.

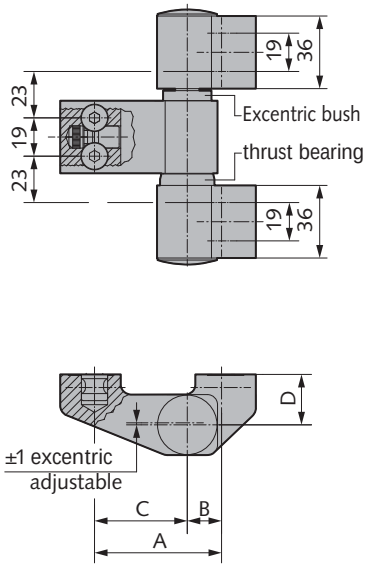

Steel door hinge, 3-parts

- incl. fixing material
- right/left usable (delivery right)
- adjustable via excentric bush
- tested according to EN 1935

Art.-N°	A	B	C	D
04.302.2563.---	63	17	46	25
04.302.2592.---	92	46	46	25
04.302.3663.---	63	17	46	36
04.302.3692.---	92	46	46	36

Available surfaces:
---.010 St galvanized
---.055 St RAL 9016 traffic white powder coated
---.099 St in special finish

Accessories:
Without any further specifications, WSS supplies the hinges pre-assembled in right handed version and with the following standard-accessories:
counter plates Art.-N° 04.350.6030.010
fixing screws Art.-N° 04.345.0025.010

Special version:
Door hinges also available for profiles with section measurement.

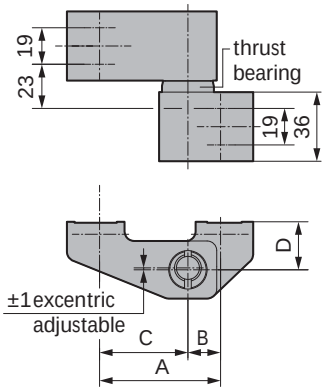

Stainless steel door hinge, 2-parts

- incl. fixing material
- right/left usable (delivery right)
- adjustable via excentric bush
- tested according to EN 1935

Art.-N°	A	B	C	D	Material/Surface
04.400.2563.426	63	17	46	25	304 matt brushed
04.400.2592.426	92	46	46	25	304 matt brushed

Accessories:
Without any further specifications, WSS supplies the hinges pre-assembled in right handed version and with the following standard-accessories:
counter plates Art.-N° 04.420.6030.405
fixing screws Art.-N° 04.415.0025.405

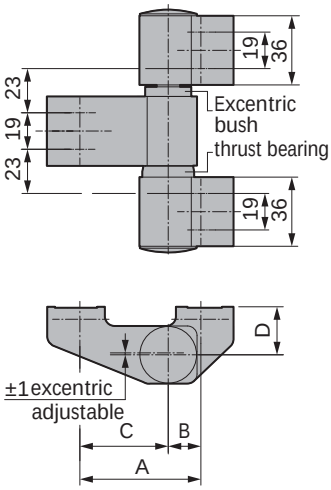

Stainless steel door hinge, 3-parts

- incl. fixing material
- right/left usable (delivery right)
- adjustable via excentric bush
- tested according to EN 1935

Art.-N°	A	B	C	D	Material/Surface
04.402.2563.426	63	17	46	25	304 matt brushed
04.402.2592.426	92	46	46	25	304 matt brushed

Accessories:
Without any further specifications, WSS supplies the hinges pre-assembled in right handed version and with the following standard-accessories:
counter plates Art.-N° 04.420.6030.405
fixing screws Art.-N° 04.415.0025.405

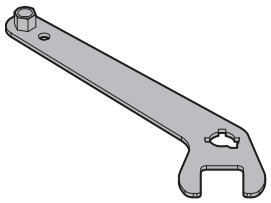

Adjustment key

- for adjustment of shadow groove and sealing pressure
- for 3-parts steel door hinges and 2D aluminium door hinges

Art.-N°	Material/Surface
04.224.0030.000	000

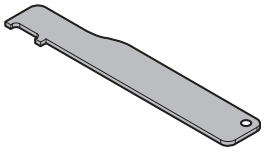

Adjustment key

- for adjustment of shadow groove and sealing pressure
- for 2-parts steel door hinges

Art.-N°	Material/Surface
04.355.0000.405	304 mill finish

General Proposals for Door Hinges Configuration for Heavy Duty Door Hinges

- heavy duty steel door hinges, center of rotation 25/36 mm
- heavy duty stainless steel door hinges, center of rotation 25 mm

Object	EFH* MFH**	EFH* MFH**	MFH**		Public buildings, Schools, Hospitals	Public buildings, Schools, Hospitals	Public buildings, Schools, Hospitals	Public buildings, Schools, Hospitals
Accessories	–	–	Door closer Automatic mode		–	–	Door closer Door coordinator device Automatic mode	
FB max. mm	1.000	1.001 - 1.250	1.000	1.001 - 1.250	1.000	1.001 - 1.250	1.000	1.001 - 1.250
Leaf weight max. kg	350	350	350	260	350	260	260	260
Hinge configuration	2 pieces	3 pieces		3 pieces	3 pieces			4 pieces
Leaf height min. 2.000 / max. 2.500 mm	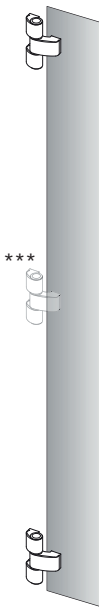	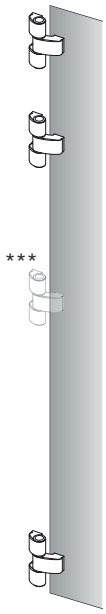		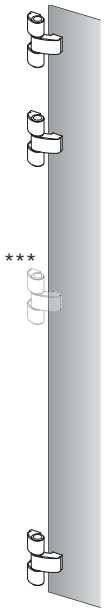	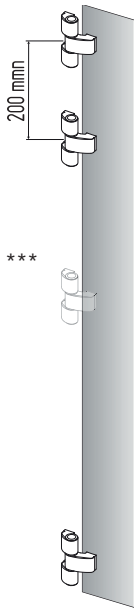			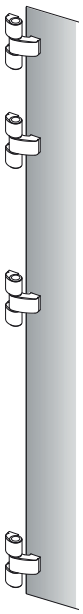

*EFH = Single-family house, **MFH = Apartment houses

*** Additional middle-hinge for leaf height >2.000 mm, on request.

Followings basics are deciding for an exact hinge configuration:
Profile system, leaf size, leaf weight, wall thickness of the profile, hinge fixation, opening of the door, type of use. To determine the allowed door sizes and weights, the guide lines and processing indications of the profile manufacturer must be respected!
For technical request please contact WSS.

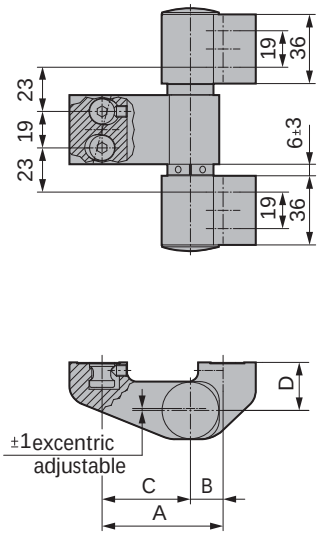

Illustration shows figure right

Heavy duty steel door hinge, 3-parts

- incl. fixing material
- with maintenance-free foil bearing made from teflon-stainless steel webbing
- with height adjustment
- adjustable via excentric bush

Art.-N°	A	B	C	D	Direction
04.306.2563.---	63	17	46	25	right
04.306.3663.---	63	17	46	36	right
04.307.2563.---	63	17	46	25	left
04.307.3663.---	63	17	46	36	left

Available surfaces:

---.010 St galvanized
---.055 St RAL 9016 traffic white powder coated
---.099 St in special finish

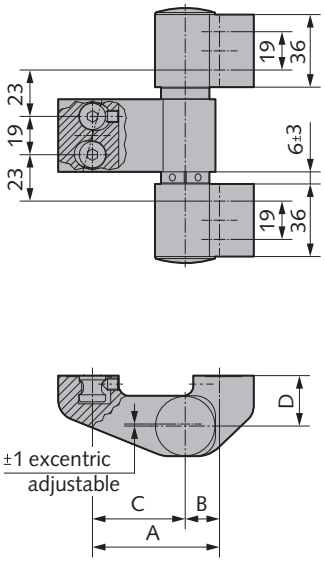

Illustration shows figure right

Heavy duty stainless steel door hinge, 3-parts

- incl. fixing material
- with maintenance-free foil bearing made from teflon-stainless steel webbing
- with height adjustment
- adjustable via excentric bush

Art.-N°	A	B	C	D	Direction	Material/Surface
04.404.2563.426	63	17	46	25	right	304 matt brushed
04.405.2563.426	63	17	46	25	left	304 matt brushed

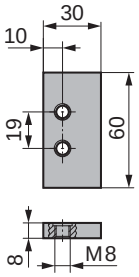

Counter plate for steel door hinge

Art.-N°	Material/Surface
04.350.6030.010	St galvanized

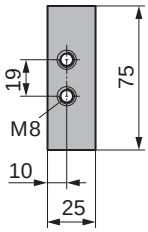

Counter plate for stainless steel hinge

Art.-N°	Material/Surface
04.420.6030.405	304 mill finish

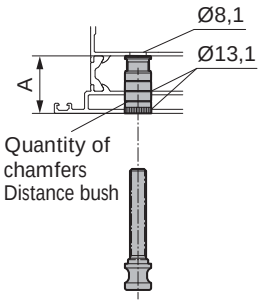

Distance bush with screw

- for outside fastening

Art.-N°	A	Quantity of chamfers	Material/Surface
04.172.1316.010	13 to < 16	1	St galvanized
04.172.1623.010	16 to < 23	2	St galvanized
04.172.2330.010	23 to < 30	3	St galvanized
04.172.3037.010	30 to < 37	4	St galvanized
04.172.3744.010	37 to < 44	5	St galvanized
04.172.4451.010	44 to < 52	6	St galvanized

Fixing screw

- standard
- 25 mm long

Art.-N°	Material/Surface
04.345.0025.010	St galvanized
04.415.0025.405	304 mill finish

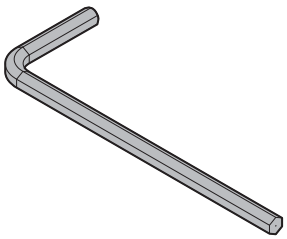

Allen key SW12

- for height adjustment of heavy duty steel door hinges

Art.-N°	Material/Surface
04.356.0000.005	St bright

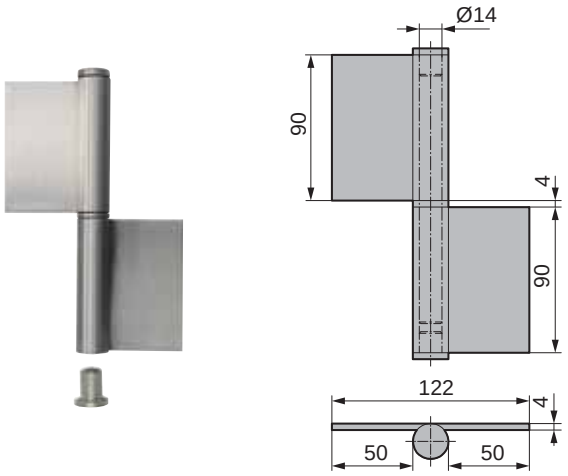

Stainless steel construction hinge, 2-parts

- all parts loose
- right/left usable
- with stainless steel spacer rings

Art.-N°	Material/Surface
04.450.0184.405	304 mill finish
04.450.0184.426	304 matt brushed

Note:
For stainless steel door hinges and special hinges we kindly ask for inquiries with detailled drawings.

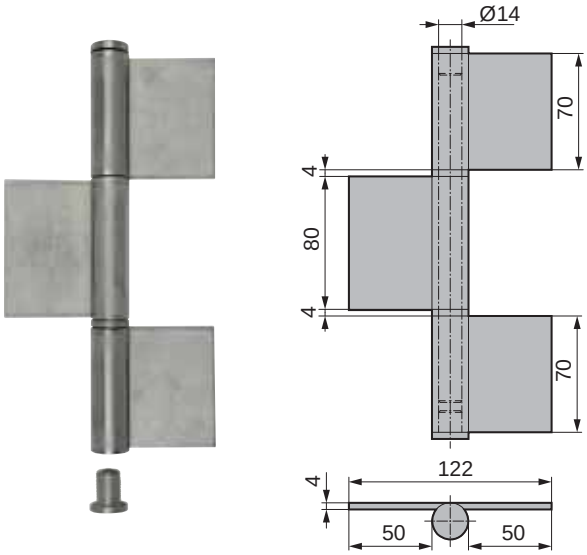

Stainless steel construction hinge, 3-parts

- all parts loose
- right/left usable
- with stainless steel spacer rings

Art.-N°	Material/Surface
04.451.0228.405	304 mill finish
04.451.0228.426	304 matt brushed

Note:
For stainless steel door hinges and special hinges we kindly ask for inquiries with detailled drawings.

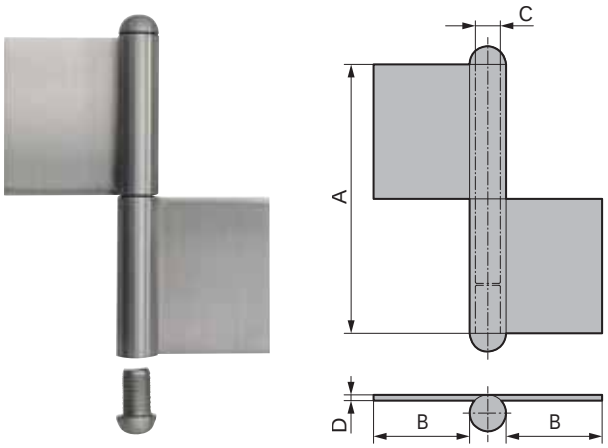

Construction hinge, 2-parts

- all parts loose
- right/left usable

Art.-N°	A	B	C	D
04.500.0140.---	140	50	13	3
04.500.0160.---	160	50	13	3
04.500.0180.---	180	50	14	4
04.500.0200.---	200	50	16	5
04.500.1180.---	180	10	14	4
04.500.1200.---	200	50	20	6
04.500.2160.---	160	50	16	4
04.500.2180.---	180	50	16	4
04.500.3160.---	160	50	16	5
04.500.3180.---	180	50	16	5

Available surfaces:
---.005 St bright
---.010 St galvanized
---.405 Stainless Steel 304 mill finish
---.426 Stainless Steel 304 matt brushed

Special version:
Special hinges for fire doors acc. to DIN 18082 also available.

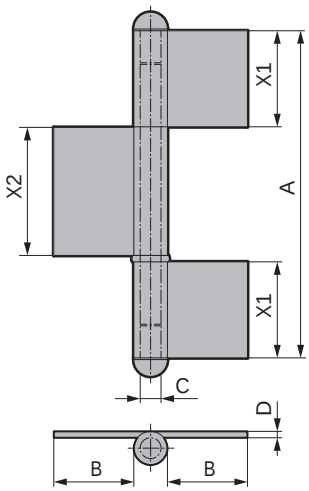

A	X1	X2
205	60	80
225	70	80
245	70	100
265	80	100
305	90	120

Construction hinge, 3-parts

- all parts loose
- right/left usable

Art.-N°	A	B	C	D
04.501.0200.---	205	50	14	4
04.501.0220.---	225	50	14	4
04.501.0240.---	245	50	16	4
04.501.0260.---	265	50	16	5
04.501.0300.---	305	50	20	6
04.501.1240.---	245	50	16	5
04.501.1260.---	265	50	20	6

Available surfaces:

---.005 St bright
---.010 St galvanized
---.405 Stainless Steel 304 mill finish
---.426 Stainless Steel 304 matt brushed

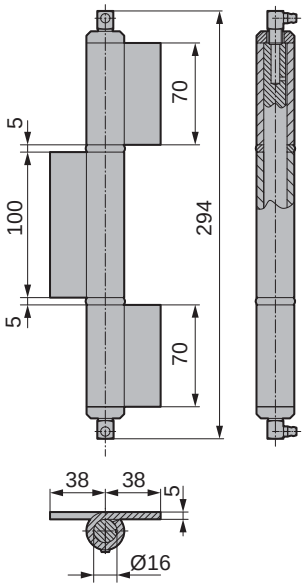

Construction hinge for steel gates, 3-parts

- right/left usable
- with grease nipple and oil groove
- with brass spacer ring
- welded hinge roll

Art.-N°	Material/Surface
04.530.0240.005	St bright
04.530.0240.010	St galvanized

Special version:
For high quantities also with dimensions 260/20/6 and 300/20/6 mm available.

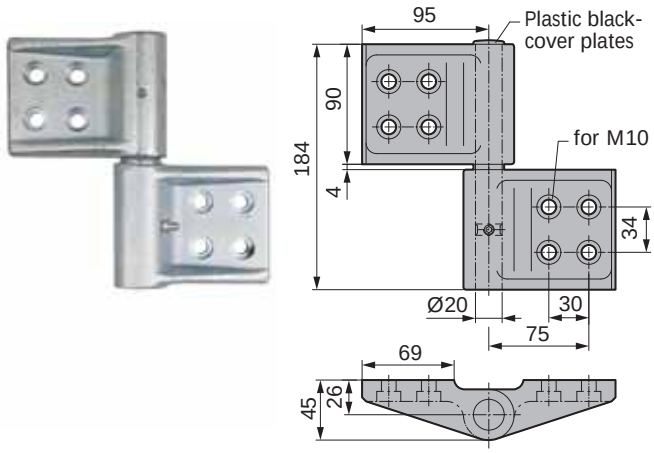

Construction hinge, 2-parts

- hinge lugs drop-forged
- self-lubricating bushes
- with ball-bearing

Art.-N°	Direction	Material/Surface
04.541.0164.005	right	St bright
04.541.0164.010	right	St galvanized
04.541.1164.005	left	St bright
04.541.1164.010	left	St galvanized

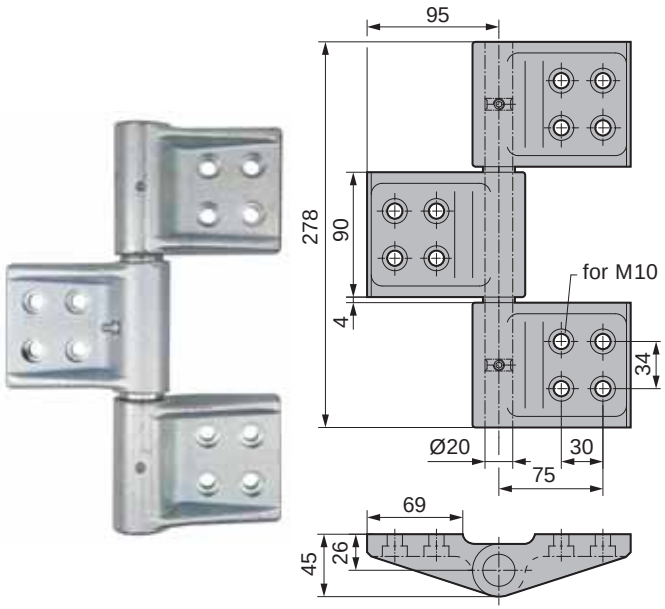

Illustration shows figure right

Construction hinge, 3-parts

- right/left usable (delivery right)
- hinge lugs drop-forged
- self-lubricating bushes
- with ball-bearing

Art.-N°	Material/Surface
04.542.0280.005	St bright
04.542.0280.010	St galvanized

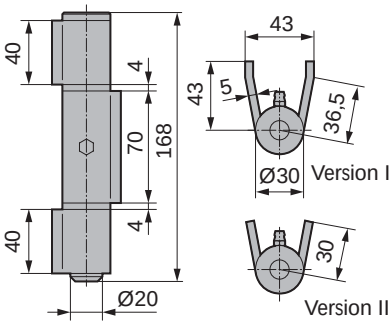

Construction hinge, 3-parts

- with grease nipple and oil groove
- with brass spacer ring
- right/left usable

Version I

Art.-N°	Length of lug	Material/Surface
04.540.0158.005	43	St bright
04.540.0158.010	43	St galvanized

Version II

Art.-N°	Length of lug	Material/Surface
04.540.1158.005	30	St bright
04.540.1158.010	30	St galvanized

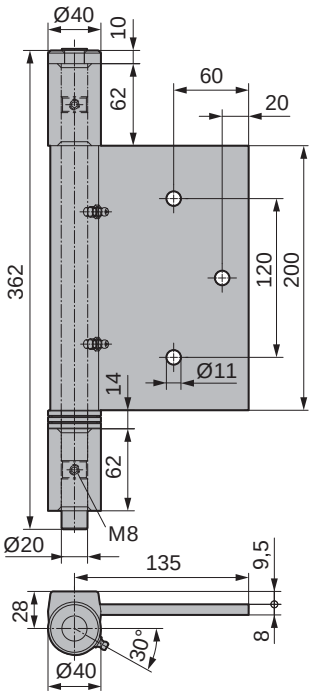

Construction hinge, 3-parts, special heavy duty version

- hinge bearing, top and bottom drop-forged
- hinge lugs centric rolled and additionally welded
- with special ball-bearing and grease nippel
- max. load capacity 600 kg with two hinges and a leaf size of max. LW 1.470 x LH 3.200 mm
- right/left usable

Art.-N°	Material/Surface
04.544.0362.005	St bright
04.544.0362.010	St galvanized
04.544.0362.408	316 mill finish

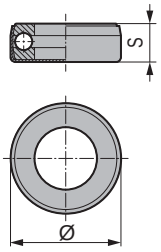

Axial ball bearing race

Art.-N°	Thick-ness (S)	Ø	Load rating Stat. kg	for Ø-Pin	Material/Surface
04.520.0013.010	8,0	22	260	13	St galvanized
04.520.0014.010	8,5	25	300	14	St galvanized
04.520.0016.010	9,0	27	350	16	St galvanized
04.520.0020.010	10,0	33	600	20	St galvanized
04.520.0022.010	12,0	43	850	22	St galvanized
04.520.0026.010	12,0	43	850	26	St galvanized
04.520.1013.405	8,0	22	195	13	304 mill finish
04.520.1014.405	8,5	25	225	14	304 mill finish
04.520.1016.405	9,0	27	260	16	304 mill finish

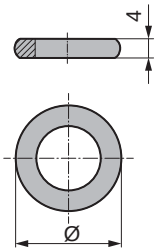

Steel-/brass spacer ring

- rounded

Art.-N°	Ø	for Ø-Pin	Material/Surface
04.521.0013.010	21	13	St galvanized
04.521.0013.305	21	13	Brass raw
04.521.0014.010	22	14	St galvanized
04.521.0014.305	22	14	Brass raw
04.521.0016.010	29	16	St galvanized
04.521.0016.305	29	16	Brass raw
04.521.0020.010	34	20	St galvanized
04.521.0020.305	34	20	Brass raw

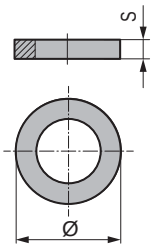

Brass-/stainless steel spacer ring

- punched

Art.-N°	Thickness (S)	Ø	for Ø-Pin	Material/Surface
04.522.0005.305	1,5	8	5	Brass raw
04.522.0007.305	1,8	13	7	Brass raw
04.522.0007.405	2,2	13	7	304 mill finish
04.522.0008.305	1,8	13	8	Brass raw
04.522.0008.405	2,0	13	8	304 mill finish
04.522.0009.305	2,2	16	9	Brass raw
04.522.0010.305	2,2	16	10	Brass raw
04.522.0010.405	2,2	16	10	304 mill finish
04.522.0011.305	2,2	20	11	Brass raw
04.522.0012.305	2,7	20	12	Brass raw
04.522.0013.305	2,2	20	13	Brass raw
04.522.0013.405	2,7	20	13	304 mill finish
04.522.0014.305	2,7	20	14	Brass raw

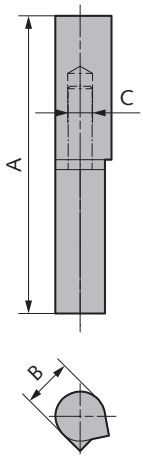

Weld-on hinge, 2-parts, fixed pin

- steel-profile material, blank
- with brass spacer ring

Iron pin

Art.-N°	A	B	C	Material/Surface
04.610.0045.005	45	9	5	St bright
04.610.0060.005	60	10	5	St bright
04.610.0080.005	80	13	7	St bright
04.610.0100.005	100	16	9	St bright
04.610.0120.005	120	16	9	St bright
04.610.0140.005	140	20	11	St bright
04.610.0160.005	160	20	12	St bright
04.610.0180.005	180	22	13	St bright

Brass pin

Art.-N°	A	B	C	Material/Surface
04.610.1045.005	45	9	5	St bright
04.610.1060.005	60	10	5	St bright
04.610.1080.005	80	13	7	St bright
04.610.1100.005	100	16	9	St bright
04.610.1120.005	120	16	9	St bright
04.610.1140.005	140	20	11	St bright
04.610.1160.005	160	20	12	St bright
04.610.1180.005	180	22	13	St bright

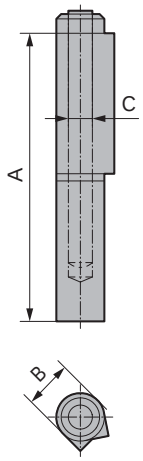

Weld-on hinge, 2-parts, loose pin

- steel-profile material, blank
- with brass spacer ring

Iron pin

Art.-N°	A	B	C	Material/Surface
04.611.0045.005	45	9	5	St bright
04.611.0060.005	60	10	5	St bright
04.611.0080.005	80	13	7	St bright
04.611.0100.005	100	16	9	St bright
04.611.0120.005	120	16	9	St bright
04.611.0140.005	140	20	11	St bright
04.611.0160.005	160	20	12	St bright
04.611.0180.005	180	22	13	St bright

Brass pin

Art.-N°	A	B	C	Material/Surface
04.611.1045.005	45	9	5	St bright
04.611.1060.005	60	10	5	St bright
04.611.1080.005	80	13	7	St bright
04.611.1100.005	100	16	9	St bright
04.611.1120.005	120	16	9	St bright
04.611.1140.005	140	20	11	St bright
04.611.1160.005	160	20	12	St bright
04.611.1180.005	180	22	13	St bright

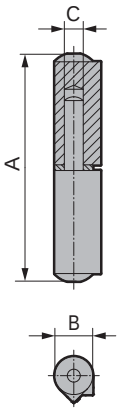

Weld-on hinge, 2-parts, fixed pin

- steel-profile material, blank
- with brass spacer ring

Iron pin

Art.-N°	A	B	C	Material/Surface
04.612.0045.005	45	9	5	St bright
04.612.0060.005	60	10	6	St bright
04.612.0070.005	70	10	6	St bright
04.612.0080.005	80	13	7	St bright
04.612.0100.005	100	16	9	St bright
04.612.0120.005	120	16	9	St bright
04.612.0140.005	140	20	10	St bright
04.612.0160.005	160	20	12	St bright
04.612.0180.005	180	20	12	St bright

Brass pin

Art.-N°	A	B	C	Material/Surface
04.612.1045.005	45	9	5	St bright
04.612.1060.005	60	10	6	St bright
04.612.1070.005	70	10	6	St bright
04.612.1080.005	80	13	7	St bright
04.612.1100.005	100	16	9	St bright
04.612.1120.005	120	16	9	St bright
04.612.1140.005	140	20	10	St bright
04.612.1160.005	160	20	12	St bright
04.612.1180.005	180	20	12	St bright

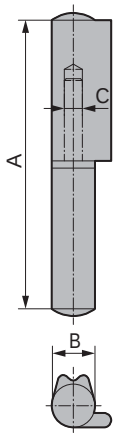

Weld-on hinge, 2-parts

- steel-profile, galvanized
- right/left usable (delivery right)

Art.-N°	A	B	Execution	Material/Surface
04.620.0080.010	80	12	MS-Ring (WB65)	St galvanized
04.620.0130.010	130	17	MS-Ring (WB70)	St galvanized

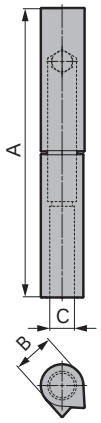

3D weld-on hinge, 2-parts

- adjustable in three dimensions
  (top/down, right/left = 0-4 mm, front/back = 0-2 mm)
- suitablefor fire proof doors

Art.-N°	A	Material/Surface
04.624.0160.005	160	St bright
04.624.0160.405	160	304 mill finish
04.624.0180.005	180	St bright
04.624.0180.405	180	304 mill finish

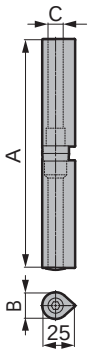

Weld-on hinge, height adjustable

- 6 mm heigth adjustable
- with integrated ball-bearing

Art.-N°	A	B	C	Material/Surface
04.626.0080.005	80	20	10	St bright
04.626.0100.005	100	20	12	St bright
04.626.0140.005	140	25	14	St bright
04.626.0160.005	160	25	14	St bright

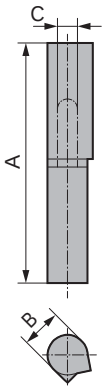

Stainless steel weld-on door hinge, 2-parts, fixed pin

- profile material

Art.-N°	A	B	C	Material/Surface
04.630.0060.405	60	10	5	304 mill finish
04.630.0080.405	80	13	7	304 mill finish
04.630.0100.405	100	16	9	304 mill finish
04.630.0120.405	120	16	9	304 mill finish
04.630.0150.405	150	20	13	304 mill finish
04.630.0180.405	180	20	13	304 mill finish

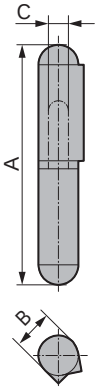

Stainless steel weld-on door hinge, 2-parts, fixed pin

- profile material

Art.-N°	A	B	C	Material/Surface
04.631.0060.405	60	10	6	304 mill finish
04.631.0080.405	80	13	8	304 mill finish
04.631.0100.405	100	16	10	304 mill finish
04.631.0120.405	120	16	10	304 mill finish
04.631.0150.405	150	20	13	304 mill finish
04.631.0180.405	180	20	13	304 mill finish

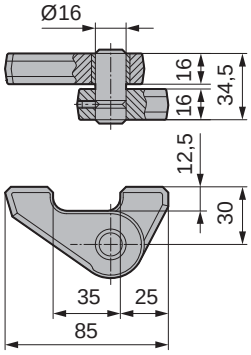

Weld-on pivot hinge, top

- with bronce bush
- right/left usable (delivery right)

Art.-N°	Bolt	Material/Surface
04.650.0030.005	Steel blank	St bright
04.650.0031.010	Steel galvanized	St galvanized
04.650.0032.005	Stainless steel	St bright

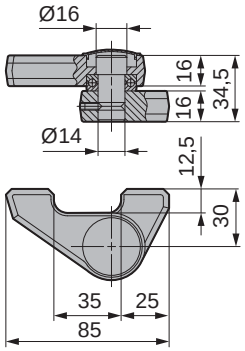

Weld-on pivot hinge, bottom

- with ball bearing
- right/left usable (delivery right)

Art.-N°	Material/Surface
04.651.0034.005	St bright
04.651.0034.010	St galvanized

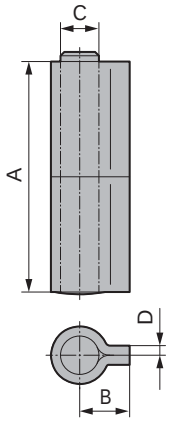

Weld-on hinge, 2-parts

Art.-N°	A	B	C	D	Material/Surface
04.672.0080.010	80	24	16	5	St galvanized
04.672.0100.010	100	24	18	5	St galvanized
04.672.0120.010	120	26	20	5	St galvanized

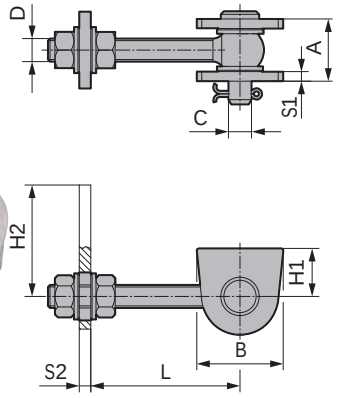

D	S1	S2	H1	H2
12	5	6	25	47
16	8	8	28	54
20	8	8	35	87
24	10	12	35	89

Gate hinge, adjustable

- to weld on

Art.-N°	A	B	C	D	L	Material/Surface
04.700.0012.005	32	45	12	12	34-80	St bright
04.700.0012.405	32	45	12	12	34-80	304 mill finish
04.700.0016.005	41	54	16	16	42-93	St bright
04.700.0016.405	41	54	16	16	42-93	304 mill finish
04.700.0020.005	46	79	18	20	56-100	St bright
04.700.0024.005	56	79	22	24	60-112	St bright

Note:
Blank steel version:
post- and frame parts blank steel,
eye screw hot zinc dipped
screw-nuts and U-plates zinc plated
bolt and splint stainless steel

Blank stainless steel version (V2A):
all parts stainless steel

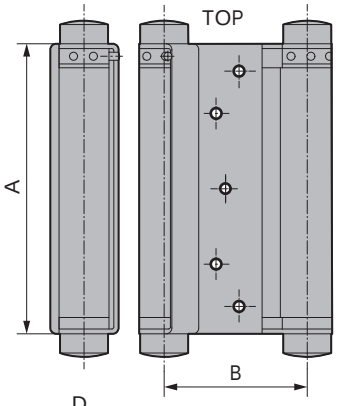

A	Door width	Door height	S	E
75	610	1.800	18–25	15
100	735	1.900	25–30	15
125	735	2.000	30–35	16
150	735	2.500	35–40	17
175	860	2.500	40–45	18
200	985	2.600	45–50	20
250	985	2.800	50–60	23
300	1.235	3.000	60–75	25

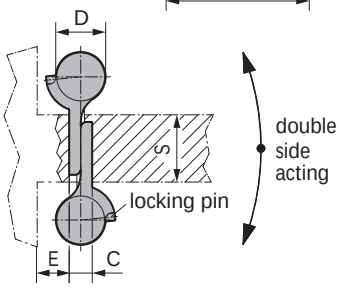

Double action door hinge, double sided acting

Art.-N°	A	B	C	D	Door weight	Material/Surface
04.750.0075.010	75	49,0	10	21	15	St galvanized
04.750.0075.426	75	49,0	10	21	15	304 matt brushed
04.750.0100.010	100	55,5	10	21	22	St galvanized
04.750.0100.426	100	55,5	10	21	22	304 matt brushed
04.750.0125.010	125	64,5	11	23	27	St galvanized
04.750.0125.426	125	64,5	11	23	27	304 matt brushed
04.750.0150.010	150	74,5	12	26	40	St galvanized
04.750.0150.426	150	74,5	12	26	40	304 matt brushed
04.750.0175.010	175	81,5	15	29	55	St galvanized
04.750.0175.426	175	81,5	15	29	55	304 matt brushed
04.750.0200.010	200	90,5	17	33	70	St galvanized
04.750.0200.426	200	90,5	17	33	70	304 matt brushed
04.750.0250.010	250	103,5	19	37	100	St galvanized
04.750.0250.426	250	103,5	19	37	100	304 matt brushed
04.750.0300.010	300	123,0	19	44	145	St galvanized
04.750.0300.426	300	123,0	19	44	145	304 matt brushed

Note:
Double action door hinge also steel nickel plated, brass plated, massive brass polished or nickel plated available.

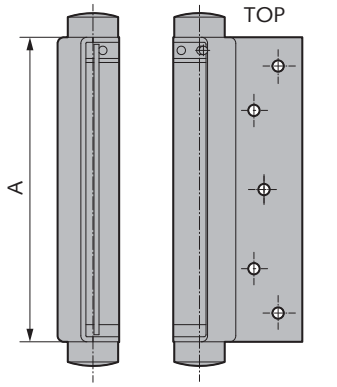

A	Door width	Door height	S	E
75	610	1.800	18–25	15
100	735	1.900	25–30	15
125	735	2.000	30–35	16
150	735	2.500	35–40	17
175	860	2.500	40–45	18
200	985	2.600	45–50	20
250	985	2.800	50–60	23
300	1.235	3.000	60–75	25

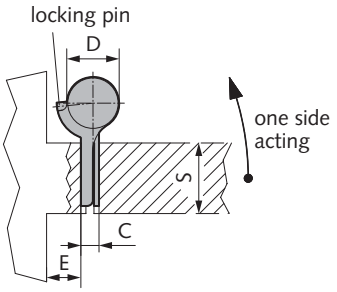

Double action door hinge, one sided acting

Art.-N°	A	C	D	Door weight	Material/Surface
04.751.0075.010	75	6,0	21	15	St galvanized
04.751.0075.426	75	6,0	21	15	304 matt brushed
04.751.0100.010	100	6,5	21	22	St galvanized
04.751.0100.426	100	6,5	21	22	304 matt brushed
04.751.0125.010	125	7,0	23	27	St galvanized
04.751.0125.426	125	7,0	23	27	304 matt brushed
04.751.0150.010	150	8,5	26	40	St galvanized
04.751.0150.426	150	8,5	26	40	304 matt brushed
04.751.0175.010	175	9,0	29	55	St galvanized
04.751.0175.426	175	9,0	29	55	304 matt brushed
04.751.0200.010	200	9,5	33	70	St galvanized
04.751.0200.426	200	9,5	33	70	304 matt brushed
04.751.0250.010	250	9,5	37	100	St galvanized
04.751.0250.426	250	9,5	37	100	304 matt brushed
04.751.0300.010	300	10,5	44	145	St galvanized
04.751.0300.426	300	10,5	44	145	304 matt brushed

Note:
Double action door hinge also steel nickel plated, brass plated, massive brass polished or nickel plated available.

Locking pin for double action door hinge

Art.-N°	Dimension	Material/Surface
50004873	75/100/115/125	St galvanized
50004874	150/175	St galvanized
50004875	200/250	St galvanized
50004876	300	St galvanized

Clamping lever for double action door hinge

Art.-N°	Material/Surface
50008252	St galvanized

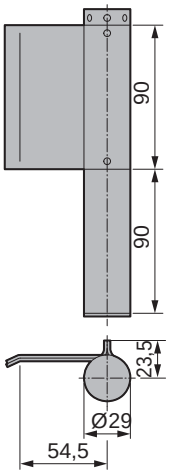

Illustration shows figure right

Spring hinge to weld on

- according to DIN 18262 / form A
- up to 1.000 x 2.000 mm leaf size
- up to 80 kg leaf weight
- single-side acting
- non-supporting

Art.-N°	Direction	Material/Surface
04.800.0180.005	right	St bright
04.800.0180.010	right	St galvanized
04.801.0180.005	left	St bright
04.801.0180.010	left	St galvanized

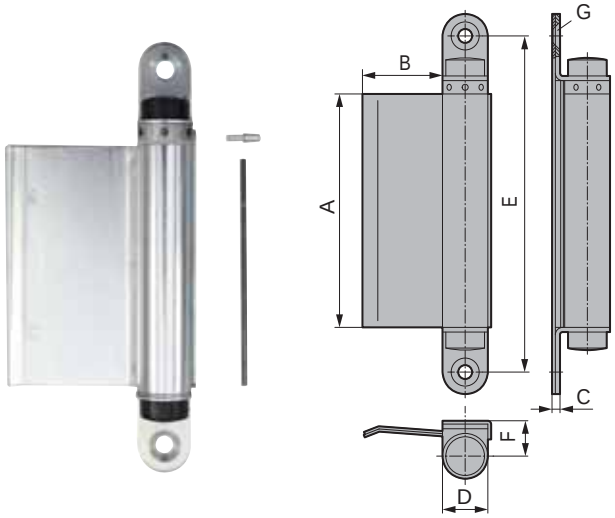

A	E	F	G	Door witdh	Door height
115	182	25	M8	735	2.500
152	232	25	M8	860	2.500
175	252	27	M10	986	2.600

Spring hinge to screw on

Art.-N°	A	B	C	D	Door weight	Material/Surface
04.804.0115.010	115	60	6	26	40	St galvanized
04.804.0152.010	152	60	8	30	55	St galvanized
04.804.0175.010	175	60	6	34	80	St galvanized

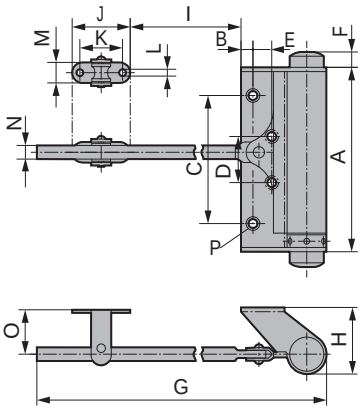

A	E	F	G	H	I	J	K	L	M	N	O	P	Size
86	10	8	ca. 255	35	ca. 155	34	22	3	12	8	33	4,0	1
108	11	9	ca. 255	40	ca. 155	34	22	3	12	8	33	4,0	2
130	12	10	ca. 345	46	ca. 235	34	22	3	12	8	33	3,5	3
150	16	12	ca. 390	56	ca. 260	42	28	3	14	9	45	5,0	4
170	14	13	ca. 490	64	ca. 360	42	28	3	14	11	45	5,0	5

Door closing spring

- right/left usable

Art.-N°	A	B	C	D	Door weight	Material/Surface
04.810.0086.010	86	6	65	23	25	St galvanized
04.810.0108.010	108	7	75	27	35	St galvanized
04.810.0108.405	108	7	75	27	35	304 mill finish
04.810.0130.010	130	8	99	34	50	St galvanized
04.810.0130.405	130	8	99	34	50	304 mill finish
04.810.0150.010	150	7	115	42	65	St galvanized
04.810.0170.010	170	11	127	59	75	St galvanized

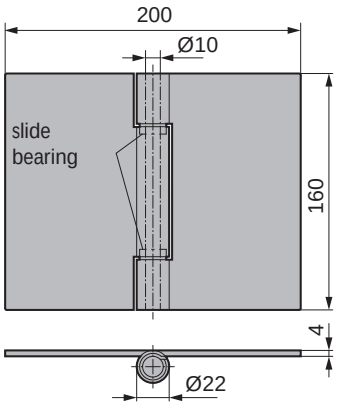

Stainless steel door hinge, 3-parts

- right/left usable

Art.-N°	Material/Surface
04.472.0160.426	304 matt brushed

Special version:
Lugs with screwing holes.

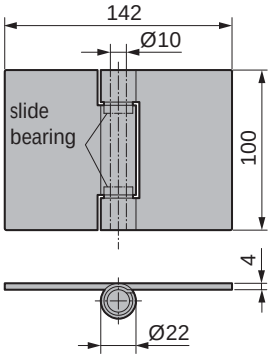

Stainless steel door hinge, 3-parts

- right/left usable

Art.-N°	Material/Surface
04.473.0100.426	304 matt brushed

Special version:
Lugs with screwing holes.

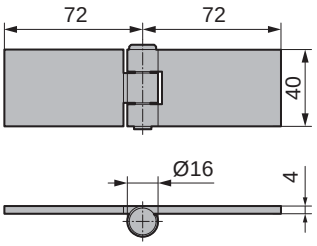

Strap hinge, 3-parts

- with stainless steel pin

Art.-N°	Material/Surface
04.830.0040.005	St bright
04.830.0040.010	St galvanized
04.830.0040.405	304 mill finish

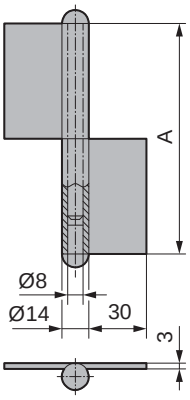

Strap hinge, 2-parts

- with loose brass pin

Art.-N°	A	Direction	Material/Surface
04.850.0080.005	80	right	St bright
04.850.0080.010	80	right	St galvanized
04.850.0100.005	100	right	St bright
04.850.0100.010	100	right	St galvanized
04.850.0120.005	120	right	St bright
04.850.0120.010	120	right	St galvanized
04.851.1080.005	80	left	St bright
04.851.1080.010	80	left	St galvanized
04.851.1100.005	100	left	St bright
04.851.1100.010	100	left	St galvanized
04.851.1120.005	120	left	St bright
04.851.1120.010	120	left	St galvanized

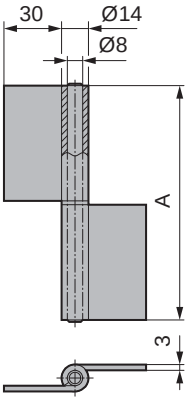

Strap hinge, 2-parts

- with loose brass pin
- right/left usable

Art.-N°	A	Material/Surface
04.854.0082.005	82	St bright
04.854.0082.010	82	St galvanized
04.854.0102.005	102	St bright
04.854.0102.010	102	St galvanized
04.854.0122.005	122	St bright
04.854.0122.010	122	St galvanized

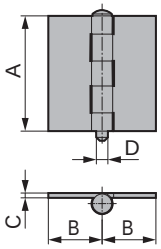

Strap hinge, 5-parts

- with brass pin

Art.-N°	A	B	C	D	Material/Surface
04.856.0060.005	60	28	2,5	6	St bright
04.856.0060.010	60	28	2,5	6	St galvanized
04.856.0095.005	95	33	3,0	7	St bright
04.856.0095.010	95	33	3,0	7	St galvanized

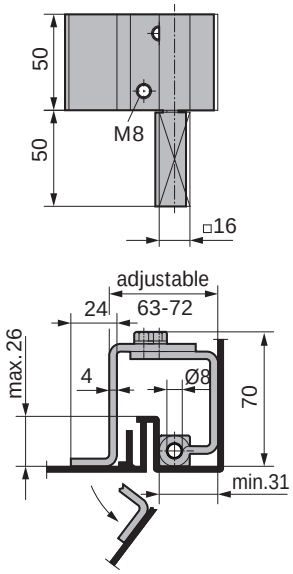

Inlaid hinge, 26 mm upstand

- frame part to weld on
- right/left usable

Art.-N°	Material/Surface
04.900.0000.010	St galvanized

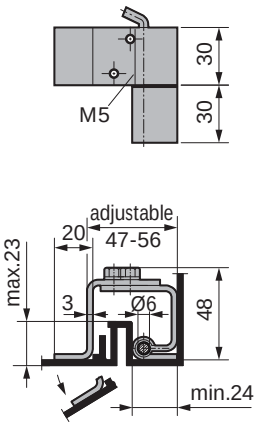

Inlaid hinge, 20 mm upstand

- frame part to weld on
- right/left usable

Art.-N°	Material/Surface
04.901.0000.010	St galvanized

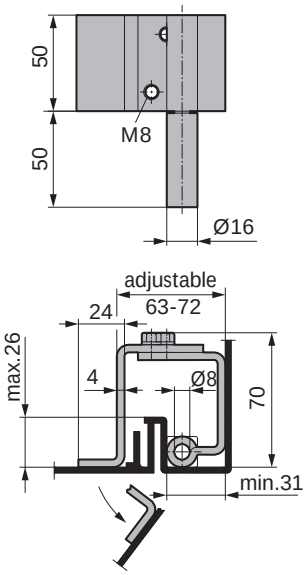

Inlaid hinge with centric guide

- frame part to weld on
- 26 mm upstand
- right/left usable

Art.-N°	Material/Surface
04.902.0000.010	St galvanized

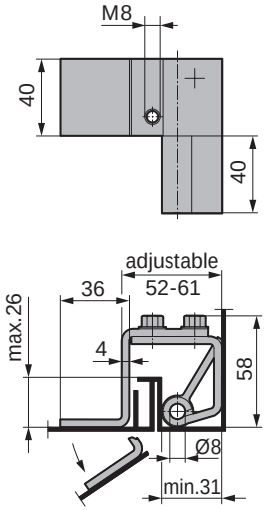

Inlaid hinge, frame part to weld on

- with centric guide
- 26 mm upstand
- right/left usable

Art.-N°	Material/Surface
04.903.0000.010	St galvanized
04.903.0000.405	304 mill finish

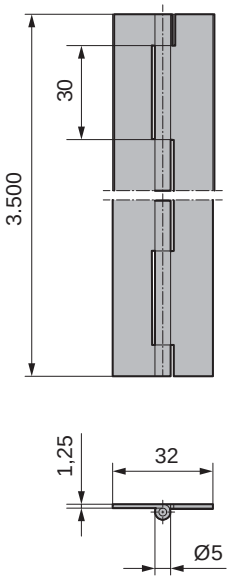

Hinge band, 32 mm open width

- in production length of 3.500 mm
- unpunched
- right/left usable

Art.-N°	Material/Surface
04.920.0032.005	St bright
04.920.0032.405	304 mill finish

Note:
Hinge bands also available in fixed length as well as perforated version.

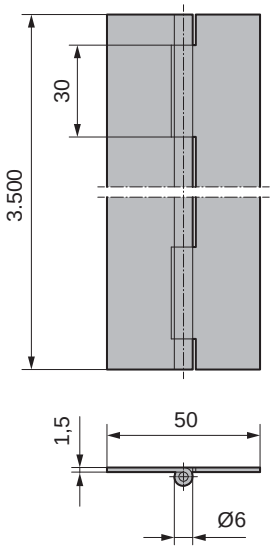

Hinge band, 50 mm open width

- in production length of 3.500 mm
- unpunched
- right/left usable

Art.-N°	Material/Surface
04.922.0050.005	St bright
04.922.0050.405	304 mill finish

Note:
Hinge bands also available in fixed length as well as perforated version.

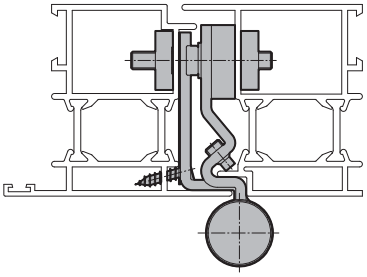

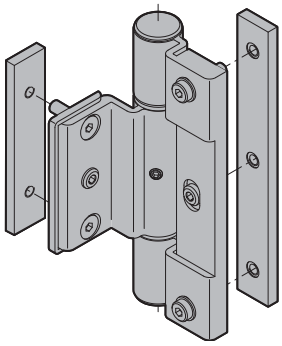

Barrel door hinges

In addition to the known scre-on and weld-on hinges, we also deliver 3-part barrel door hinges out of aluminium, steel and stainless steel, aligned to the seperate profile systems.

Concealed hinge-fixing frame- and leaf-sided inside the rabbet.

Load capacity of the hinges:

- 2 pcs. = max. 120 kg leaf weight
- 3 pcs. = max. 150 kg leaf weight

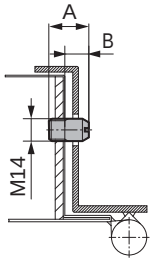

Fastening bolt with thread

Art.-N°	A	B	Material/Surface
04.940.1435.010	35	20	St galvanized
04.940.2015.010	25	15	St galvanized

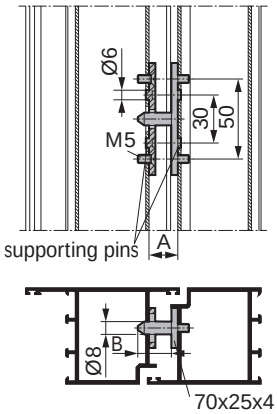

Fastening bolt, 2-parts

- with strike plate, hinge sided

Art.-N°	A	B	Material/Surface
04.950.1116.405	11-16	17	304 mill finish
04.950.1722.405	17-22	21	304 mill finish
04.950.2326.405	23-26	25	304 mill finish

Wilh. Schlechtendahl & Söhne
GmbH & Co. KG

Hauptstraße 18–32
42579 Heiligenhaus
Deutschland

Tel.: +49 (0) 20 56 / 17-0
Fax: +49 (0) 20 56 / 51 42

wss@wss.de
www.wss.de

Based in 42579 Heiligenhaus,
Local court Wuppertal, HRA 20804

Managing Directors: Guido Lücker, Robin Fasel

VAT No.: DE 121546484
Tax ID.: 13957280071

All image, product, dimension and design information is correct at the time of going to press. We reserve the right to make any changes that may be required for technical and further development.
We assume no liability for printing or other errors. Legal claims, regardless of their nature, may not be inferred from the use of our documents. No part of this document may be reproduced without our prior written consent.

Our General Terms an Conditions apply (see www.wss.de).

kat_K0200484_Baender_GB • © 4/2021 • Wilh. Schlechtendahl & Söhne GmbH & Co. KG