Installation drawing, 2nd scissor (drawing shows DIN right)

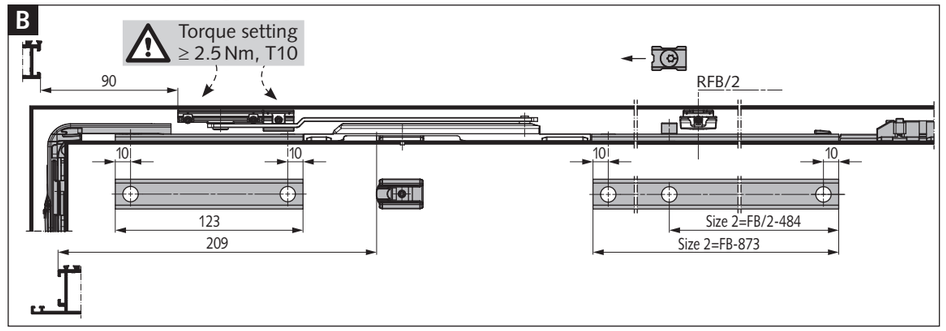

Assembly sequence of thelink rods

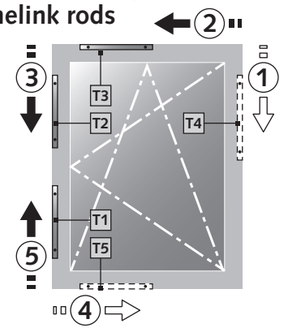

Installation drawing (drawing shows DIN right, fitting in tilted position)

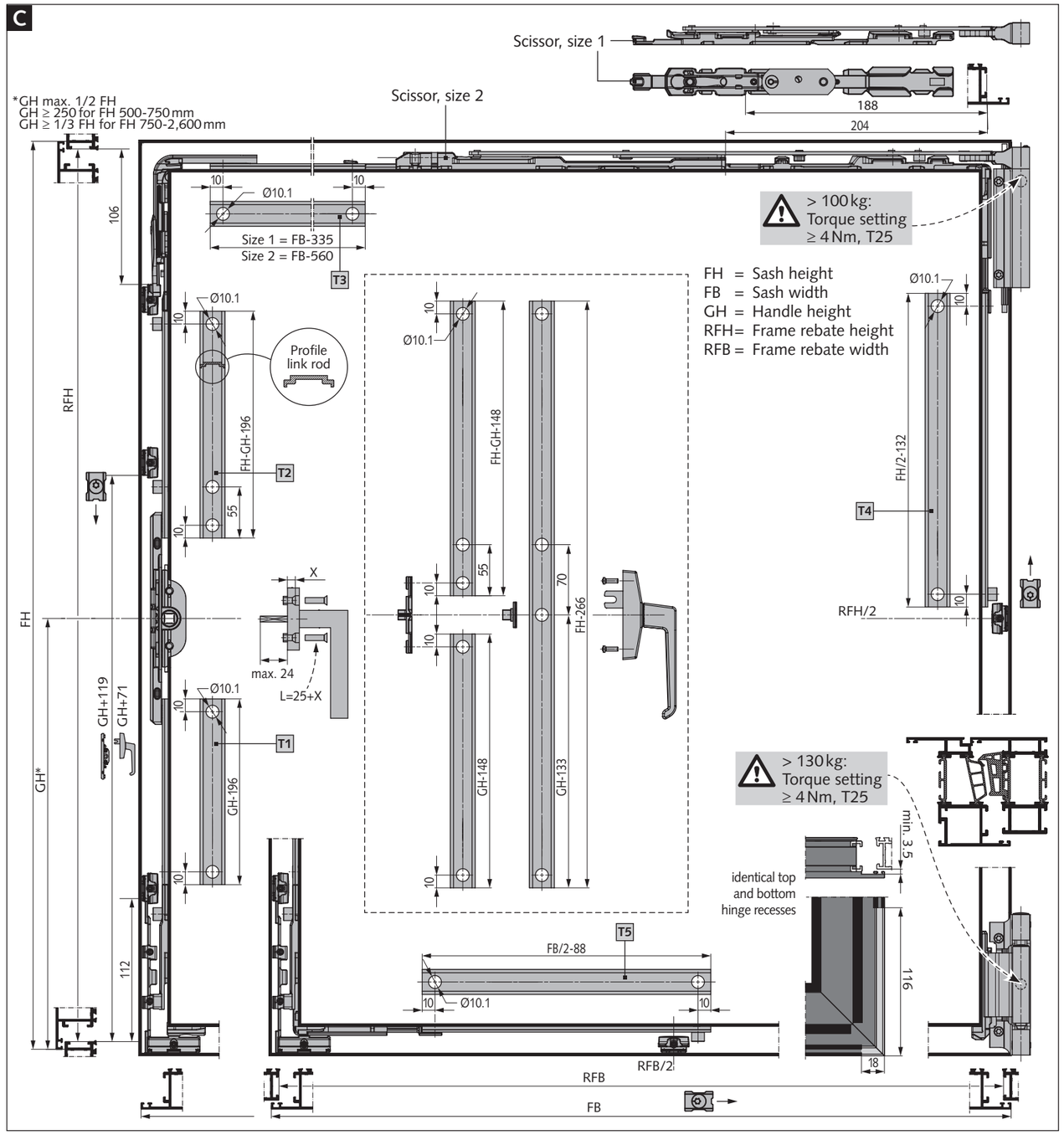

GB

Assembly Instructions

Standard: Tilt-Turn Fitting

General information

This assembly instruction is a component of the product. It contains important details on safety, assembly and use. This instruction is intended for specialist personnel. Use the product only as described and only for the specified areas of application. After assembly and function test, this instruction must be handed over to the user or operator. It must be kept for future reference.

Part description (fig. A)

Basic fittings scope of delivery

- **1** Anti-jemmy device Turn-Tilt
- **2** Tilt bearing
- **3** Sash ramp
- **4** Tilt lock bolt Tilt-Turn
- **5** Striker, 2x
- **6** Corner transmission with / without mishandling device
- **7** Countersunk screw M5x8, red, 2x
- **8.1** Turn-Tilt scissor size 1
- **8.2** Turn-Tilt scissor size 2
- **9** Scissor hinge
- **10** Scissor bearing KL1 or KL2
- **11** End cap corner bearing
- **12** Corner bearing KL1 or KL2
- **13** Countersunk screw M5x9, blue, 2x
- **14** End cap for corner hinge
- **15** Corner hinge
- **16** Corner bearing pin
- **17** Clamping angle

Accessories (fig. A)

- **18** M5 rivet nut (smaller countersunk head)
- **19** Special screw scissor bearing >100 kg
- **20** Special countersunk screw corner bearing >130 kg

2nd scissor Tilt-Turn:

- **21.1** Scissor stop
- **21.2** Scissor guide
- **21.3** Scissor arm
- **21.4** Scissor holder

Centre lock, horizontal or vertical:

- **22.1** Corner transmission centre lock
- **22.2** Locking point, 2x
- **22.3** Striker, 2x

Gear handle:

- **23** Concealed gear with or without mishandling device
- **24.1** Tilt-turn gear handle, lockable
- **24.2** Drive connector, one piece, including screws
- **24.3** Drive connector, separable, including screws

Third-party parts (fig. B and C)

T1–T5 Link rods

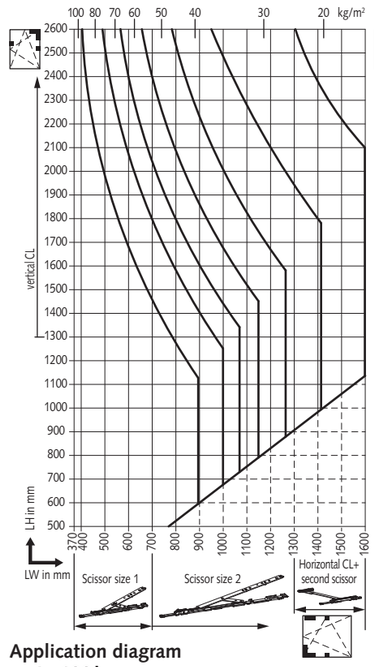

Application diagram up to 100 kg

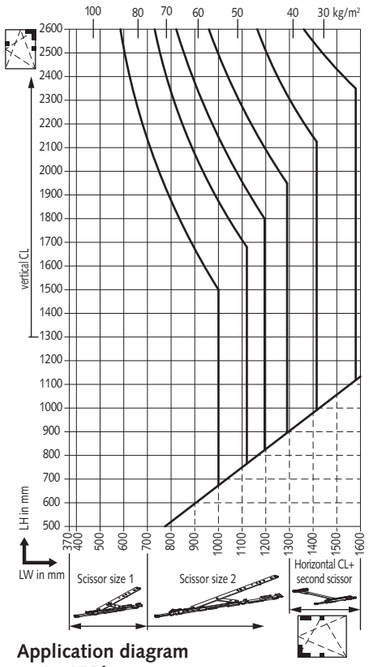

Application diagram up to 150 kg
>100 kg 19, >130 kg 20

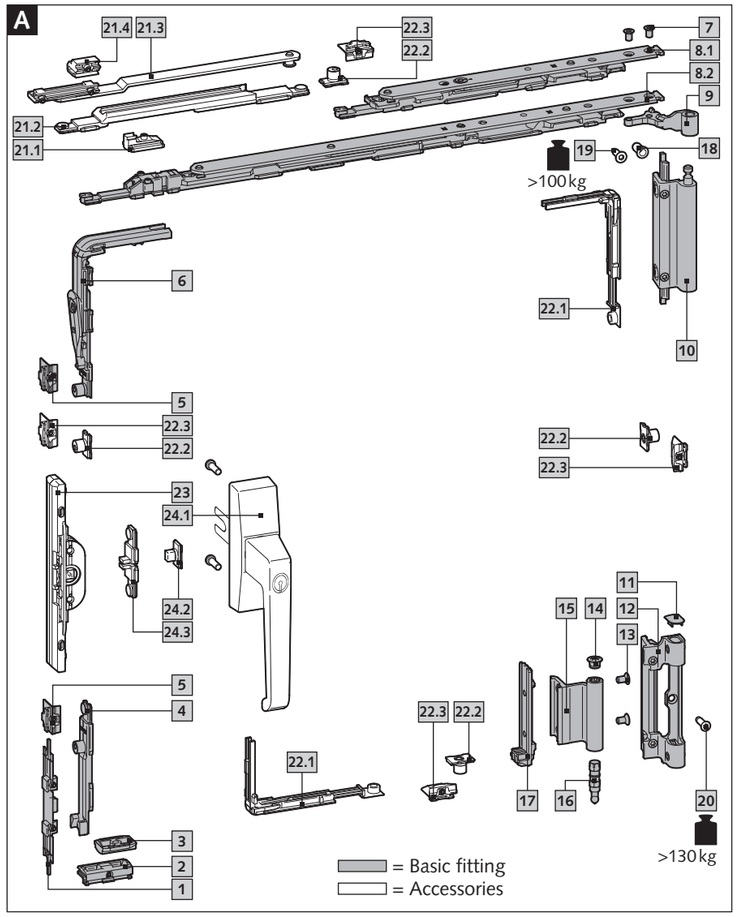

Assembly instructions, frame

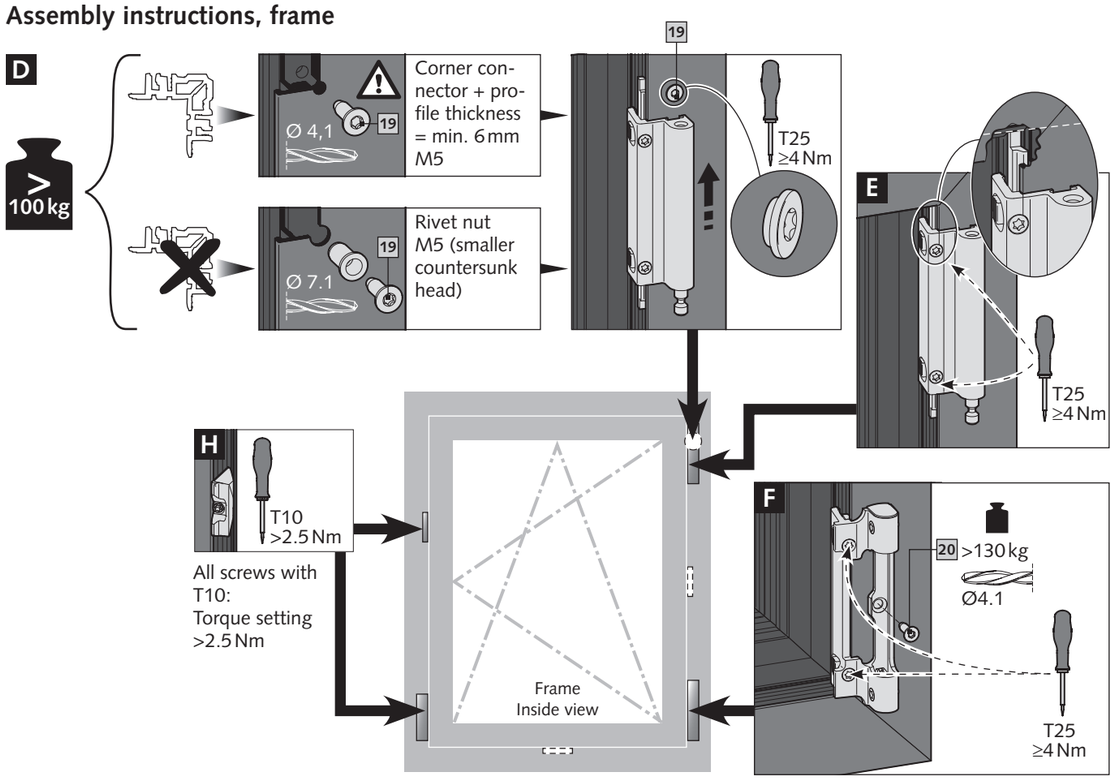

Assembly instructions, sash

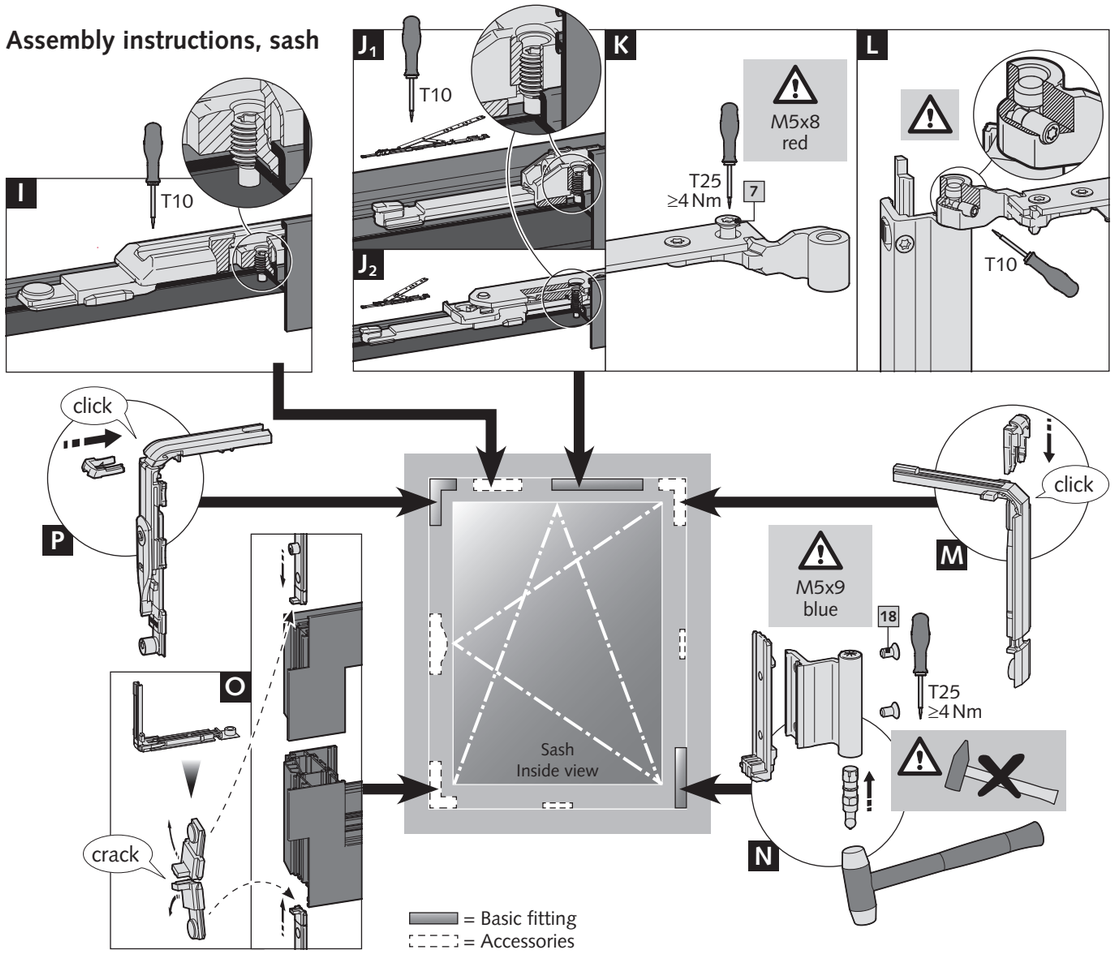

Important information

- To secure the scissor bearing pin, please fully insert the grub screw flush using a screwdriver T10 (see fig. L).
- For sash weights >100 kg, special screw **19** on the scissor bearing is required.
- For sash weights >130 kg, special countersunk screw **20** on the corner bearing is required.
- Use only the hinge side intended for the profile system (clamping bracket KL1 or KL2). The arrangement can be made on the basis of the hinge selection matrix (see "Selection of Hinges" below or in the catalogue).
- The installation of a mishandling device is prescribed in accordance with VOB-DIN18360.
- From a window width or - height of 1,300 mm, we recommend the use of additional locking systems.
- Further information can be obtained in the catalogue "Turn-Tilt Fittings".
- When installing the fittings, the torque settings must be considered (see figures).
- Only a combination of original WSS parts may be used.
- When using the corner transmission centre lock **22.1** in combination with a recessed sash groove, a spacer has to be installed.

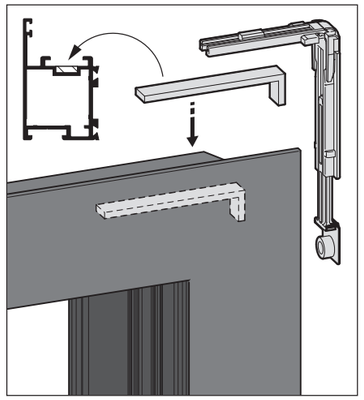

- The use of opening limiters is recommended when window sashes hit uncontrolled against the window reveals or aluminium support profiles (e.g. caused by wind) in order to avoid any damage or destroy of the fittings or profiles.

Selection of Hinges KL1, KL2

Explanation, see catalogue "Turn-Tilt Fittings"

Example:

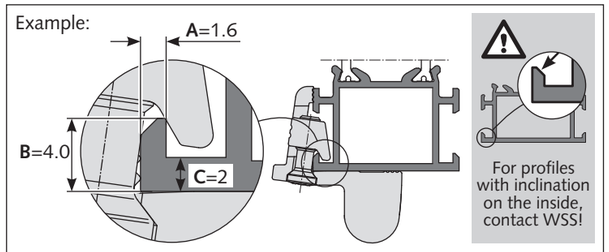

B \ A	KL2 1.3	KL2 1.4	KL2 1.5	KL2 1.6	KL2 1.7	KL2 1.8	KL1 1.9	KL1 2	KL1 2.1	KL1 2.2	KL1 2.3	KL1 2.4	KL1 2.5
4.4	2.2	2.4	2.4	2.5	2.5	2.5	2.2	2.3	2.4	2.5	2.5	2.5	2.5
4.3	2.2	2.3	2.3	2.5	2.5	2.5	2.1	2.2	2.3	2.4	2.5	2.5	2.5
4.2	2.1	2.2	2.2	2.4	2.5	2.5	2.1	2.2	2.2	2.3	2.5	2.5	2.5
4.1	2.0	2.1	2.2	2.4	2.5	2.5	2.0	2.1	2.2	2.2	2.4	2.5	2.5
4.0	2.0	2.0	2.1	2.3	2.4	2.4	2.0	2.1	2.1	2.2	2.4	2.4	2.5
3.9	2.0	2.0	2.0	2.2	2.3	2.4	1.9	2.0	2.1	2.1	2.3	2.4	2.5
3.8	2.0	2.0	2.0	2.1	2.2	2.3	1.8	2.0	2.0	2.1	2.3	2.3	2.5
3.7	1.9	2.0	2.0	2.0	2.1	2.3	1.7	2.0	2.0	2.0	2.2	2.3	2.4
3.6	1.6	1.9	2.0	2.0	2.0	2.2	1.6	2.0	2.0	2.0	2.1	2.2	2.3
3.5	-	1.7	2.0	2.0	2.0	2.1	1.5	2.0	1.9	2.0	2.0	2.2	2.2
3.4	-	1.6	2.0	2.0	2.0	2.0	2.1	1.6	1.8	1.9	2.0	2.1	2.1
3.3	-	1.5	1.8	1.9	2.0	2.0	2.0	1.5	1.7	1.8	2.0	2.0	2.1
3.2	-	-	1.6	1.8	2.0	2.0	2.0	1.5	1.6	1.7	1.9	2.0	2.0
3.1	-	-	1.5	1.7	1.9	2.0	2.0	-	1.5	1.7	1.8	1.9	2.0
3.0	-	-	1.5	1.6	1.7	1.9	1.9	-	1.5	1.6	1.7	1.8	2.0

C ≤ 2.3 corresponds to KL2

Tool selection

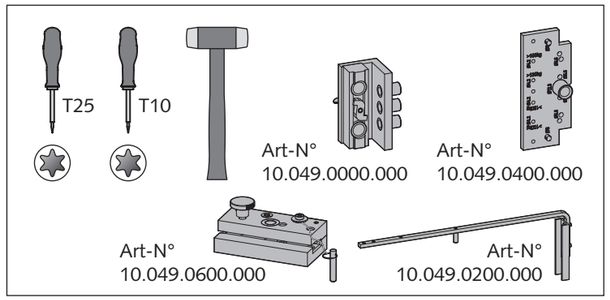

Profile processing

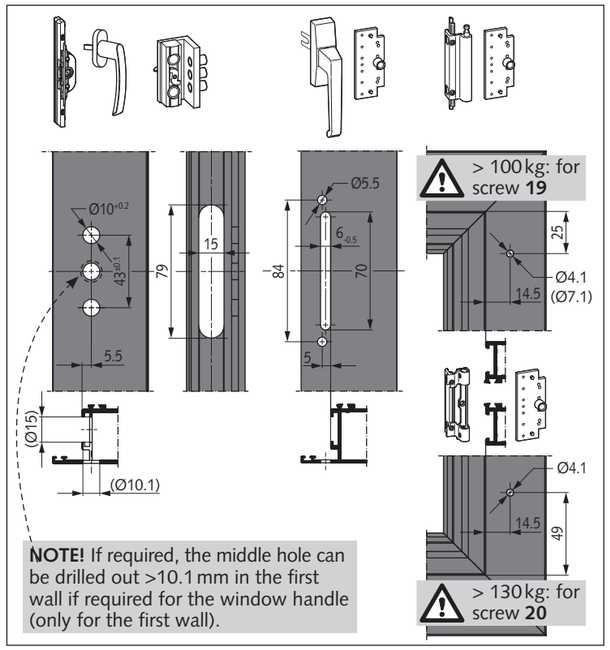

Adjustment

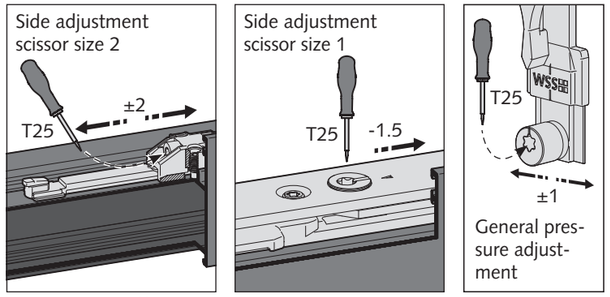

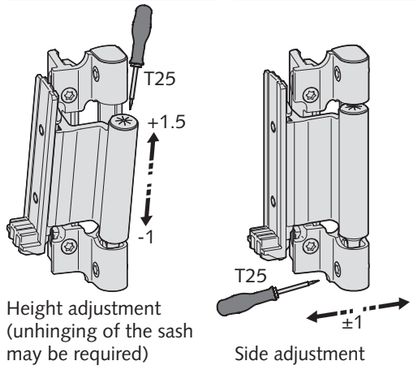

Wilh. Schlechtendahl & Söhne GmbH & Co. KG
Hauptstrasse 18–32
42579 Heiligenhaus
Germany
Phone: +49 (0) 20 56/17-0
Fax: +49 (0) 20 56/51 42
wss@wss.de
www.wss.de

ma_K0200321_Standard_Kipp-Dreh-Beschlag_GB • © 10/2016 • Wilh. Schlechtendahl & Söhne GmbH & Co. KG