WSS

Hardware Solutions
for Glass and
Timber Doors

SPRINT Sliding Door Systems

SPRINT NOVA 80

SPRINT NOVA 180

SPRINT PURA 150

Accessories

5 YEARS WARRANTY

Table of Contents

General Information ..... **Page 3**
SPRINT – Room Design ..... Page 3
Quality – Made in Germany ..... Page 4
SOFT-STOP, Bi-Parting-System and Low-Energy-Drive ..... Page 5
Information for use with ESG, VSG and timber ..... Page 5
Corrosion protection classes according to DIN EN 1670 ..... Page 5

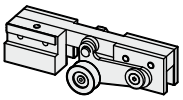

NOVA 80 ..... **Page 6**

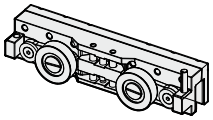

NOVA 180 ..... **Page 18**

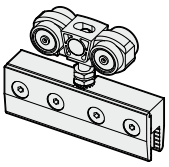

PURA 150 ..... **Page 26**

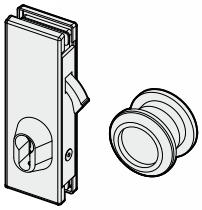

Accessories ..... **Page 36**

Appendix ..... **Page 43**
Glass Preparations ..... Page 43
Materials and Surfaces ..... Page 45
Index ..... Page 46
General Overview: Locks and Fittings for Glass ..... Page 47

SPRINT – Room Design

Space-saving and multifunctional – SPRINT Sliding Door Systems for use in the private and commercial sector. We offer full flexibility for every kind of application with the three models NOVA 80, NOVA 180 and PURA 150.

Glass creates openness and clear lines with a maximum light access. Maybe you prefer timber? In this case the models NOVA 80 and PURA 150 are the right choice.

The damped opening and closing SOFT-STOP, the Bi-Parting-System or the Low-Energy-Drive allow a comfortable interior of your new sliding door.

Other products such as sliding door flush handles, door handles, locks, floor guide, track stop and seals are also available.

Please refer to the table in the following in order to find out which system meets your requirements. Should you still need support for choosing the suitable system, please give us a call.

Open space with SPRINT!

	NOVA 80	NOVA 180	PURA 150
Profile height	65 mm	65 mm	120 mm
Profile width	67 mm	67 mm	47,5 mm
Leaf weight	max. 80 kg	max. 180 kg	max. 150 kg
Glass thickness/ESG	8-12 mm	8-12 mm	8-12 mm
Glass thickness/VSG	8,76-12,76 mm	8,76-12,76 mm	8,76-10,76 mm
Timber thickness	min. 35 mm	–	min. 30 mm
Movement cycles	100.000	100.000	100.000
Corrosion protection	class 4	class 4	class 4
Wall installation	✓	✓	✓
Ceiling installation	✓	✓	✓
Side panel	✓	✓	✓
Height adjustability	±3,5 mm (carrier)	±5 mm (carrier)	±5 mm (carrier)
SOFT-STOP	✓	–	✓
Bi-Parting-System	✓	–	✓
Low-Energy-Drive	–	–	✓
E6/C-0 silver anodized	✓	✓	✓
E6/C-31 stainless steel anodized	✓	✓	✓

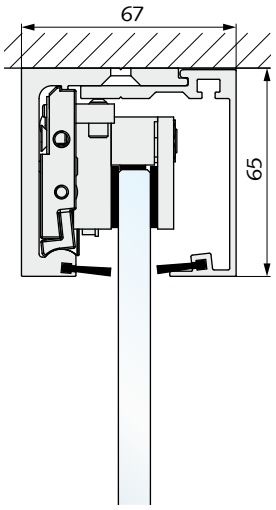

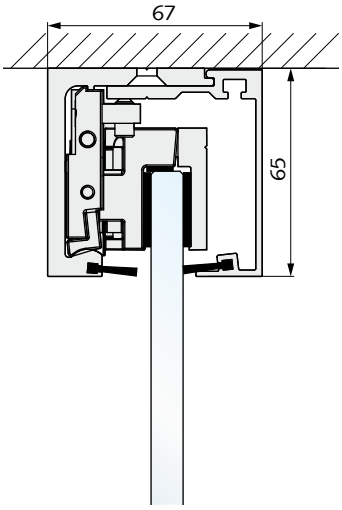

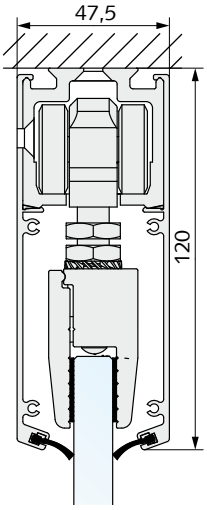

Quality – Made in Germany

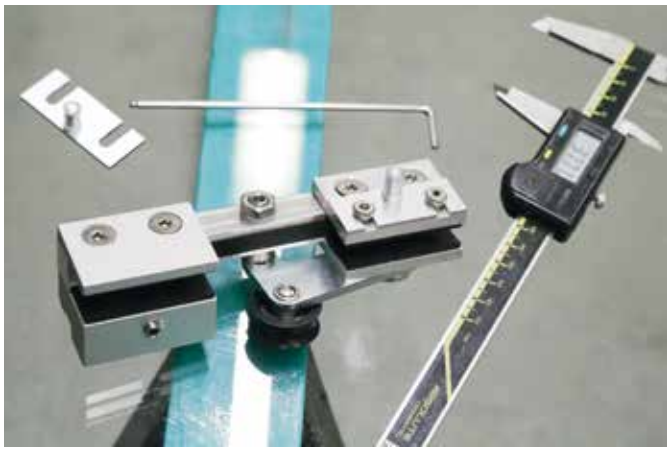

The good idea is the beginning of every product. A team of qualified designers and engineers develop in a continuous dialogue with you, our customers, products in an outstanding quality at the headquarter in Heiligenhaus.

An important element is a modern production, subject to the process of continuous monitoring and control. Only the best products pass the tests on our test stands. Durability-, salt spray-, stress test – we test our products through their paces. We build knowledge, upgrade it, develop it further and create products that prevail in the market by their durability, quality and design.

Construction, development and production are certified according to DIN EN ISO 9001:2015.

High stock quantities of standard products, short delivery times and decision paths allow for a prompt and straight forward proceeding of your orders. We act fast, flexible and always in accordance with our customers.

We grant a 5 year warranty on the products of the series NOVA 80, NOVA 180 and PURA 150, providing appropriate installation and usage has been applied.

Development and
final product –
WSS focuses on quality
Made in Germany.

SOFT-STOP, Bi-Parting-System and Low-Energy-Drive

The door is gently damped and guided into the final position using the damped opening- and closing **SOFT-STOP**.

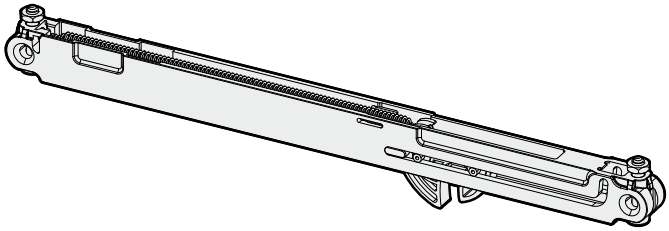

Synchronous movement of two leaves (opening and closing of two sliding leaves at the same time) using the **Bi-Parting-System** with deflection pulleys and wire rope.

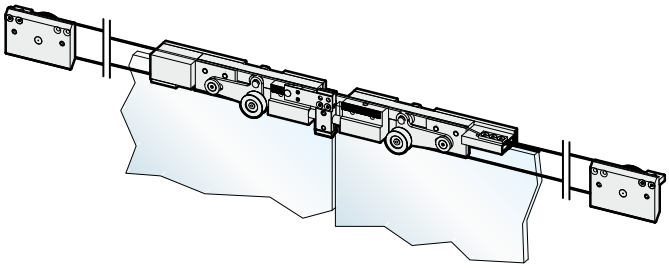

The **Low-Energy-Drive** guarantees an additional comfort and security. This drive allows an automatically opening and closing of the door at the push of a button. The slow motion of the door element guarantees a secure entering and leaving of the room and is therefore optimal for barrier-free living.

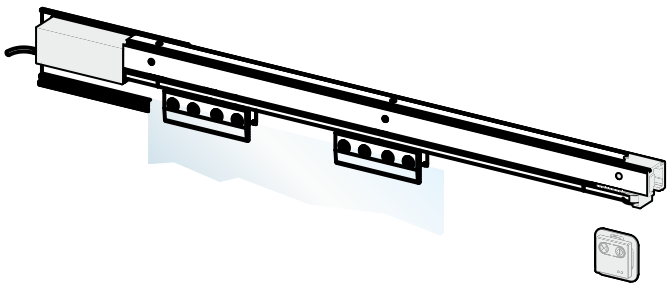

Information for use with ESG, VSG and timber

The sliding door systems in this catalogue are suitable for 8, 10 and 12 mm ESG (ESG made of uncoated Float glass).

With a few exceptions, they are also suitable for VSG (8,76 and 10,76 as well as 12,76 mm), made of 2 x ESG. Due to the special characteristics of VSG we recommend to additionally glue the carriers to the glass. Our technical information for ESG applies when using VSG with pressure resistant interlayer.

The use of other glass is at your own risk.

The fittings of the series NOVA 80 and PURA 150 can also be used for timber doors.

Corrosion protection classes according to DIN EN 1670

The sliding systems of the series SPRINT correspond to the corrosion protection class 4, tested according to DIN EN 1670 and therefore can be used for high humidity environments (HHE). The sliding doors can be temporarily exposed to moisture by splashing water or high humidity.

Corrosion protection	Corrosion resistance
class 0	no specified resistance
class 1	low resistance
class 2	medium resistance
class 3	high resistance
class 4	very high resistance

NOVA 80

Flexible and compact.
Up to 80 kg leaf weight.

Technical Details:

Glass:	8, 10 and 12 mm ESG 8,76, 10,76 mm and 12,76 mm VSG
Timber:	min. 35 mm door thickness
Leaf weight:	max. 80 kg (ESG made of uncoated Float glass)
Profile height:	65 mm
Sliding track:	drilled every 340 mm / Ø 6,3 mm
Height adjustability:	±3,5 mm (carrier)
Test:	100.000 cycles according to DIN EN 1527 / class 6
Corrosion protection:	according to DIN EN 1670 / class 4

Features:
- suitable for single and double leaf doors
- wall or ceiling installation
- application with side panel possible
- damped opening and closing SOFT-STOP (up to 70 kg)
- manual bi-parting-system (for double leaf doors)

Materials and surfaces:

Aluminium	E6/C-0 silver anodized	114
	E6/C-31 stainless steel anodized	139

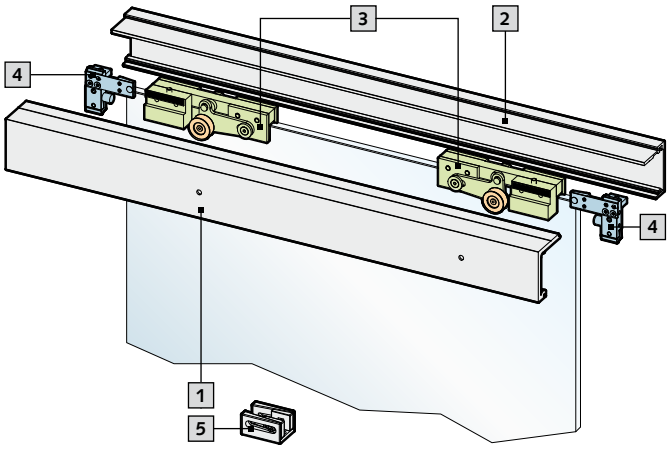

Components:
1. sliding track, 2. cover, 3. carrier, 4. track stop,
5. floor guide (RAL 9005 / standard)

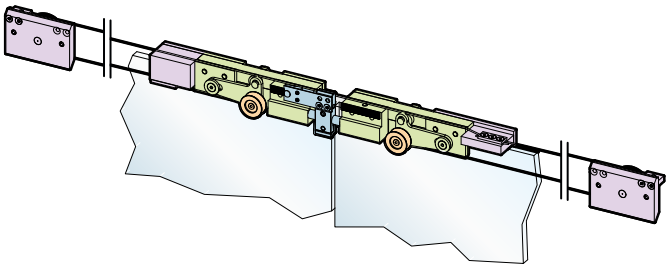

The **Bi-Parting-System** allows a synchronic movement of two leaves.

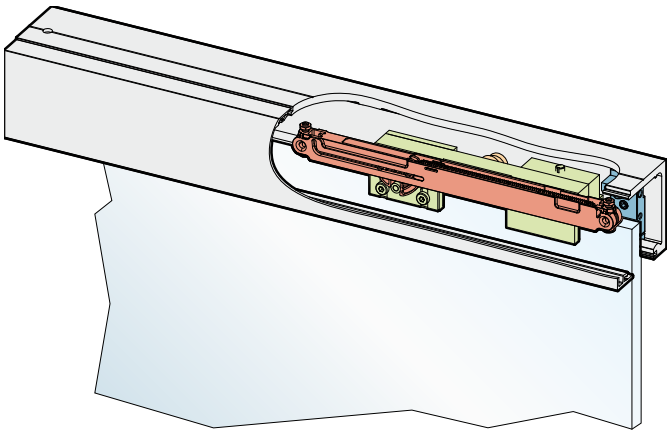

The door is gently damped and guided into the final position using the **SOFT-STOP**.

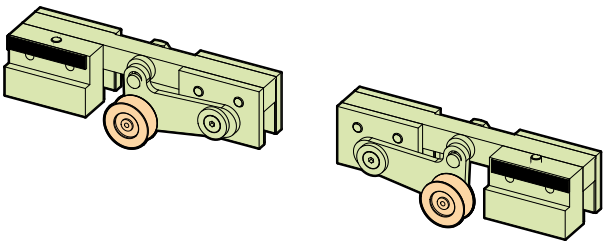

Optimized roller carriers ensure a smooth and quiet motion.

Sectional view

Sliding door leaf

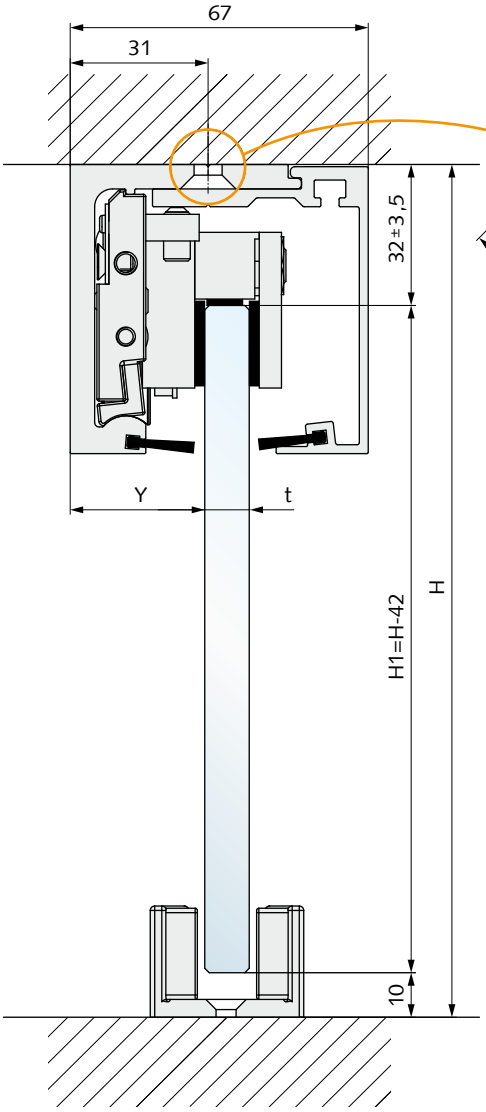

Figure shows ceiling installation

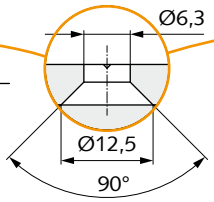

Sliding door leaf with side panel

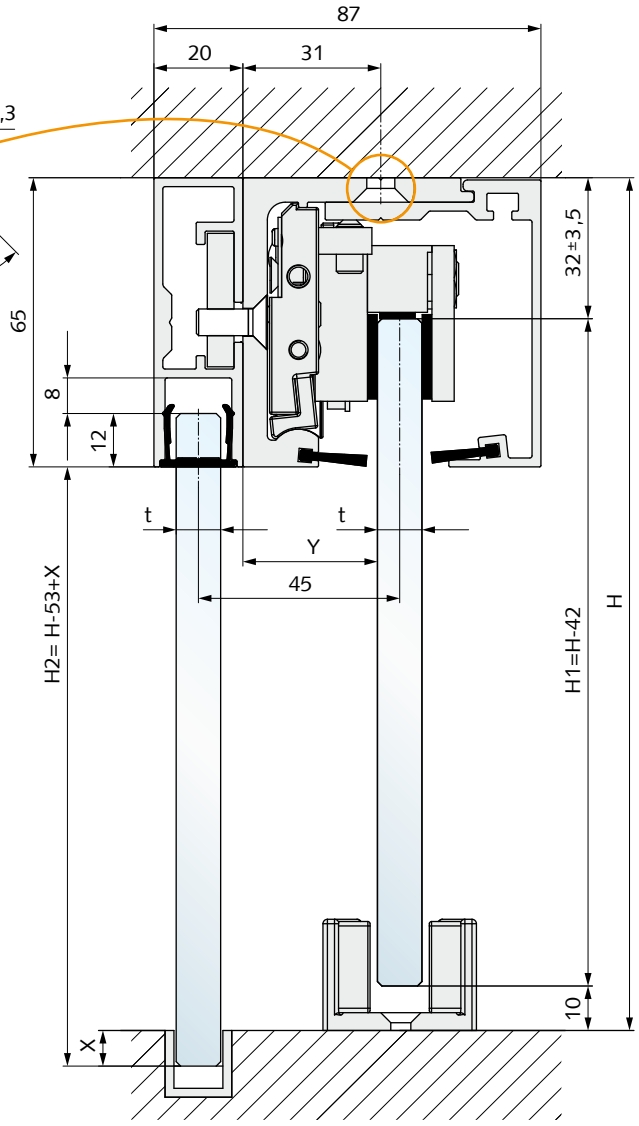

Figure shows ceiling installation

Calculation of the glass height:
Sliding door leaf: H1 = H - 42 mm
Side panel: H2 = H - 53 mm + insert to floor X

Information:
When using a sliding door with side panel, please calculate an overlap of 30 mm.

t mm	Y mm
8,00	31,00
8,76	31,00
10,00	30,00
10,76	30,00
12,00	29,00
12,76	29,00

Installation situations

Sliding door, single leaf

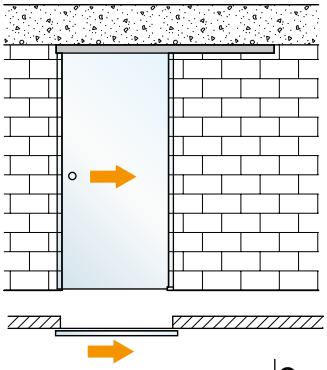

Components:	Quantity:	Details:
Sliding door system *or* Sliding door system with SOFT-STOP	1 piece	Page 10 Page 11
End caps	2 pieces	Page 16

Sliding door, single leaf with side panel

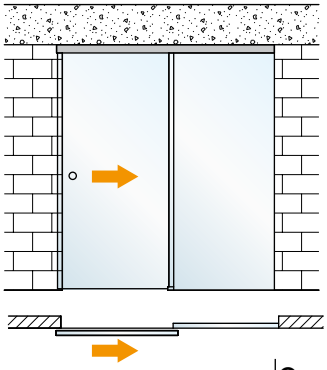

Components:	Quantity:	Details:
Sliding track for ceiling installation for side panel	1 piece	Page 12
Cover	1 piece	Page 12
Accessory set for glass *or* Accessory set for glass with SOFT-STOP	1 piece	Page 13
End caps	2 pieces	Page 16
Side panel profile with clamping plates	1 piece	Page 17
Screen protection profile	1 piece	Page 17
(Inlayer profile on request)	1 piece	Page 17

Sliding door, double leaf

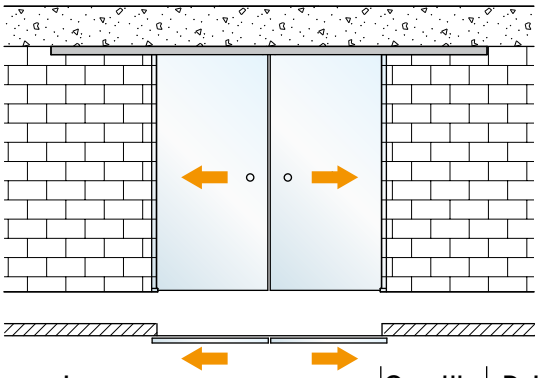

Components:	Quantity:	Details:
Sliding track	1 piece	Page 12
Cover	1 piece	Page 12
Accessory set for glass *or* Accessory set for glass with SOFT-STOP *or* Bi-Parting-System for glass	2 pieces 2 pieces 1 piece	Page 13
End caps	2 pieces	Page 16

Sliding door, double leaf with side panel

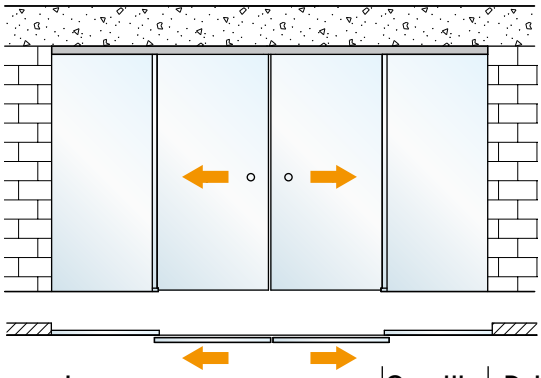

Components:	Quantity:	Details:
Sliding track for ceiling installation for side panel	1 piece	Page 12
Cover	1 piece	Page 12
Accessory set for glass *or* Accessory set for glass with SOFT-STOP *or* Bi-Parting-System for glass	2 pieces 2 pieces 1 piece	Page 13
End caps	2 pieces	Page 16
Side panel profile with clamping plates	1 piece	Page 17
Screen protection profile	1 piece	Page 17
(Inlayer profile on request)	1 piece	Page 17

Accessories:
Sliding door flush handles, door handles, locks, floor guide, floor stop and seals see pages 36 to 42.

Information: SOFT-STOP and Bi-Parting-System cannot be combined with each other!

Sliding door system for ceiling installation

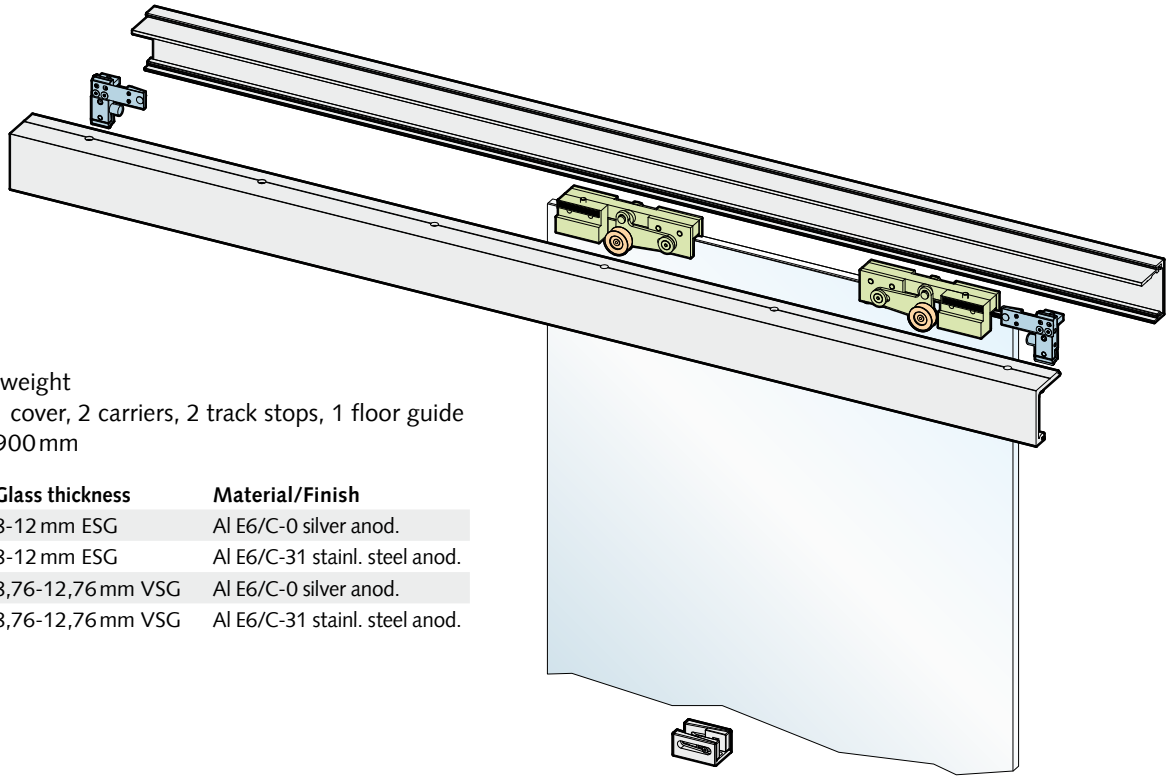

- max. 80 kg leaf weight
- 1 sliding track, 1 cover, 2 carriers, 2 track stops, 1 floor guide
- Sliding track: 1.900 mm

Art.-N°	Glass thickness	Material/Finish
28.401.0600.114	8-12 mm ESG	Al E6/C-0 silver anod.
28.401.0600.139	8-12 mm ESG	Al E6/C-31 stainl. steel anod.
28.405.0600.114	8,76-12,76 mm VSG	Al E6/C-0 silver anod.
28.405.0600.139	8,76-12,76 mm VSG	Al E6/C-31 stainl. steel anod.

Sliding door system for wall installation

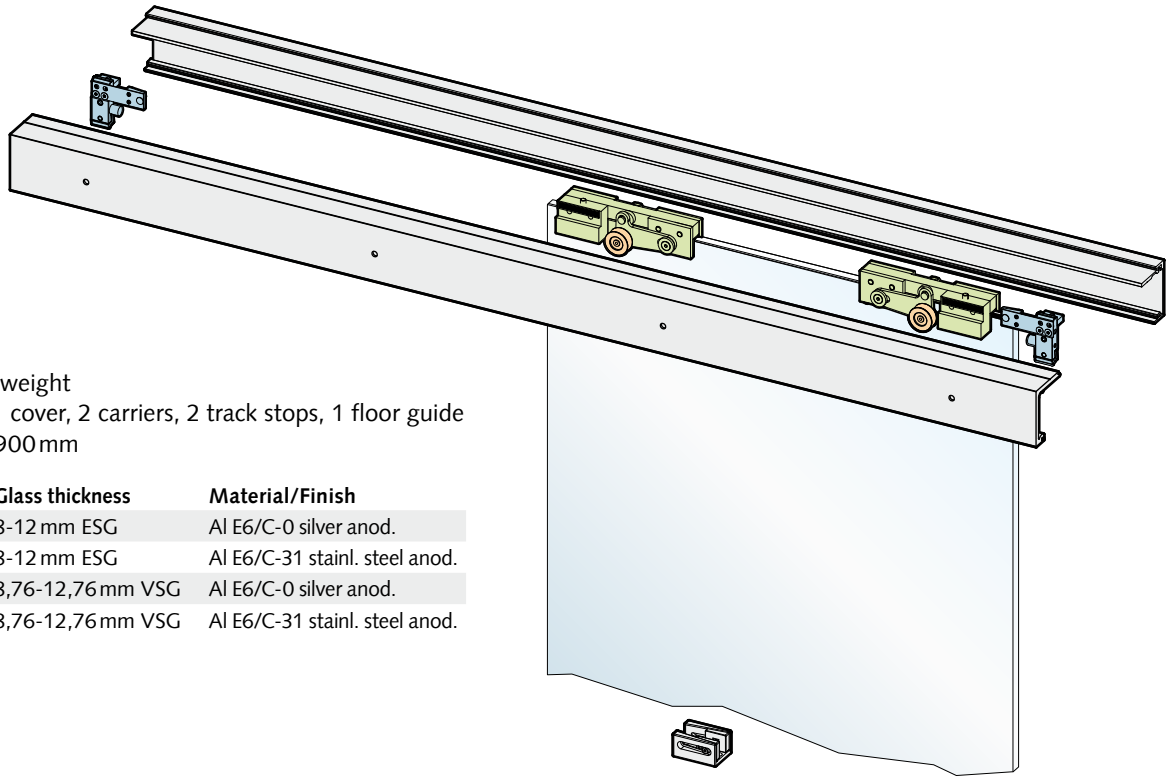

- max. 80 kg leaf weight
- 1 sliding track, 1 cover, 2 carriers, 2 track stops, 1 floor guide
- Sliding track: 1.900 mm

Art.-N°	Glass thickness	Material/Finish
28.403.0600.114	8-12 mm ESG	Al E6/C-0 silver anod.
28.403.0600.139	8-12 mm ESG	Al E6/C-31 stainl. steel anod.
28.407.0600.114	8,76-12,76 mm VSG	Al E6/C-0 silver anod.
28.407.0600.139	8,76-12,76 mm VSG	Al E6/C-31 stainl. steel anod.

Sliding door system for ceiling installation with SOFT-STOP

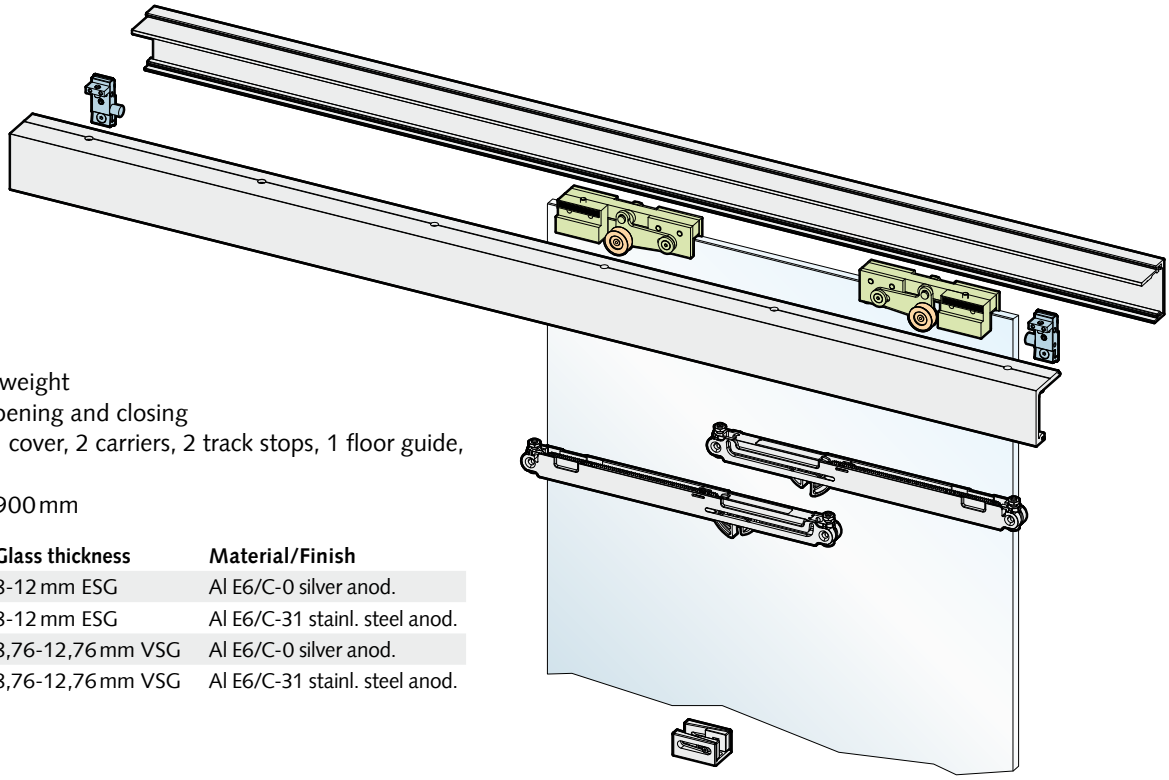

- max. 70 kg leaf weight
- with damped opening and closing
- 1 sliding track, 1 cover, 2 carriers, 2 track stops, 1 floor guide, 2 SOFT-STOP
- Sliding track: 1.900 mm

Art.-N°	Glass thickness	Material/Finish
28.411.0600.114	8-12 mm ESG	Al E6/C-0 silver anod.
28.411.0600.139	8-12 mm ESG	Al E6/C-31 stainl. steel anod.
28.415.0600.114	8,76-12,76 mm VSG	Al E6/C-0 silver anod.
28.415.0600.139	8,76-12,76 mm VSG	Al E6/C-31 stainl. steel anod.

Sliding door system for wall installation with SOFT-STOP

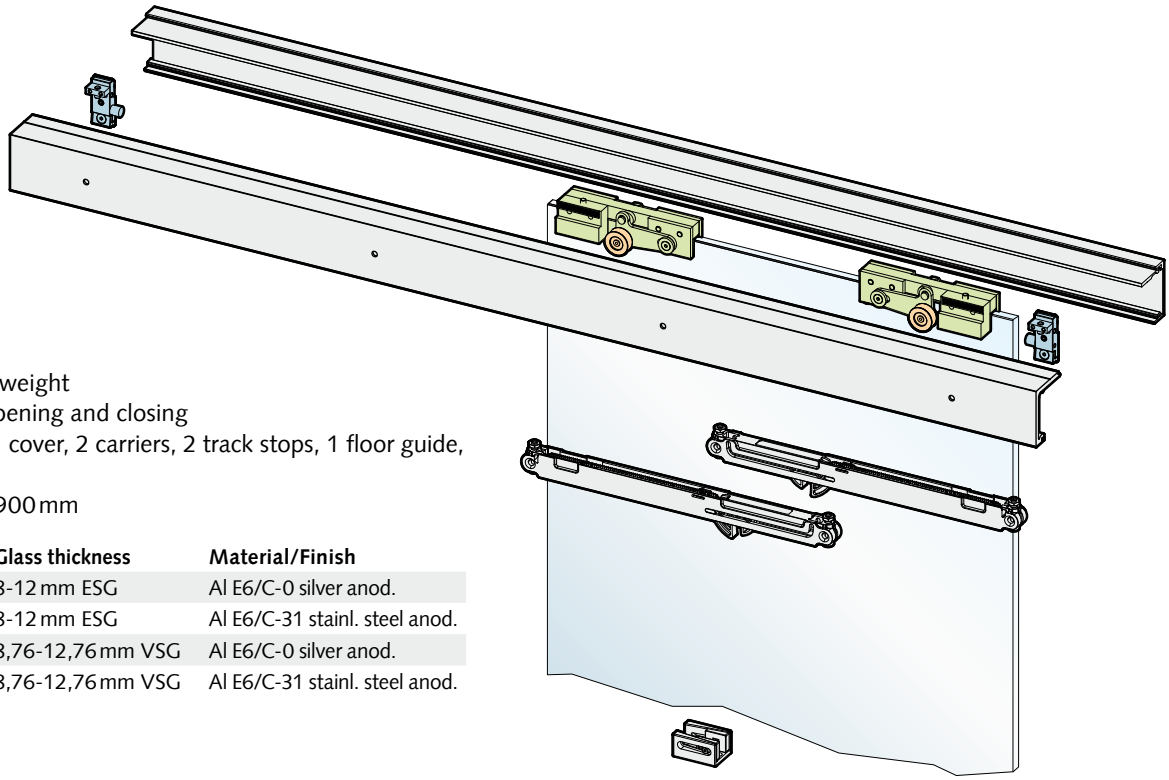

- max. 70 kg leaf weight
- with damped opening and closing
- 1 sliding track, 1 cover, 2 carriers, 2 track stops, 1 floor guide, 2 SOFT-STOP
- Sliding track: 1.900 mm

Art.-N°	Glass thickness	Material/Finish
28.413.0600.114	8-12 mm ESG	Al E6/C-0 silver anod.
28.413.0600.139	8-12 mm ESG	Al E6/C-31 stainl. steel anod.
28.417.0600.114	8,76-12,76 mm VSG	Al E6/C-0 silver anod.
28.417.0600.139	8,76-12,76 mm VSG	Al E6/C-31 stainl. steel anod.

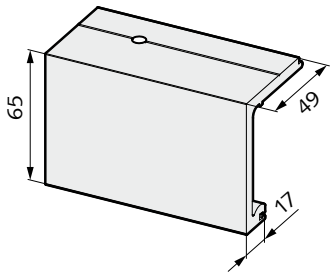

Sliding track

- for ceiling installation

Art.-N°	Length	Material/Finish
28.700.0000.114	6.000 mm	Al E6/C-0 silver anod.
28.700.0000.139	6.000 mm	Al E6/C-31 stainl. steel anod.
28.701.0000.114	1.900 mm	Al E6/C-0 silver anod.
28.701.0000.139	1.900 mm	Al E6/C-31 stainl. steel anod.
28.702.0000.114	cut to size	Al E6/C-0 silver anod.
28.702.0000.139	cut to size	Al E6/C-31 stainl. steel anod.

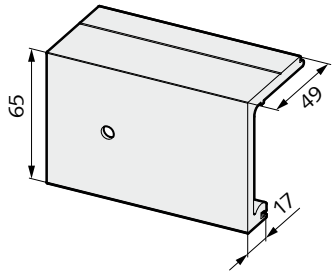

Sliding track

- for wall installation

Art.-N°	Length	Material/Finish
28.710.0000.114	6.000 mm	Al E6/C-0 silver anod.
28.710.0000.139	6.000 mm	Al E6/C-31 stainl. steel anod.
28.711.0000.114	1.900 mm	Al E6/C-0 silver anod.
28.711.0000.139	1.900 mm	Al E6/C-31 stainl. steel anod.
28.712.0000.114	cut to size	Al E6/C-0 silver anod.
28.712.0000.139	cut to size	Al E6/C-31 stainl. steel anod.

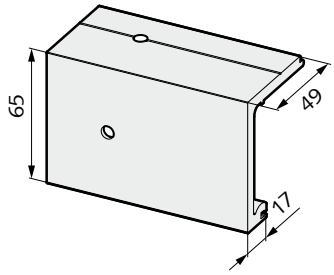

Sliding track

- for ceiling installation for sidepanel

Art.-N°	Length	Material/Finish
28.714.0000.114	6.000 mm	Al E6/C-0 silver anod.
28.714.0000.139	6.000 mm	Al E6/C-31 stainl. steel anod.
28.716.0000.114	cut to size	Al E6/C-0 silver anod.
28.716.0000.139	cut to size	Al E6/C-31 stainl. steel anod.

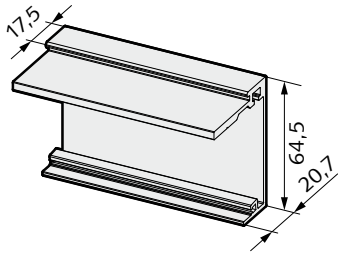

Cover

Art.-N°	Length	Material/Finish
28.740.0000.114	6.000 mm	Al E6/C-0 silver anod.
28.740.0000.139	6.000 mm	Al E6/C-31 stainl. steel anod.
28.741.0000.114	1.900 mm	Al E6/C-0 silver anod.
28.741.0000.139	1.900 mm	Al E6/C-31 stainl. steel anod.
28.742.0000.114	cut to size	Al E6/C-0 silver anod.
28.742.0000.139	cut to size	Al E6/C-31 stainl. steel anod.

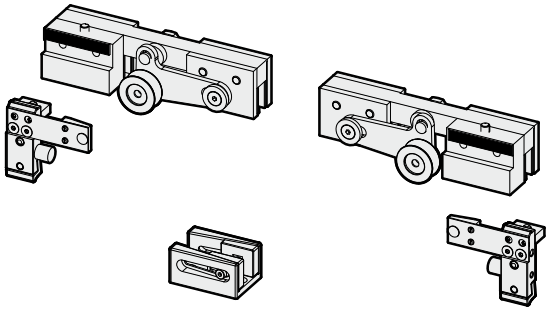

Accessory-Set for glass

- 2 carriers, 2 track stops, 1 floor guide
- floor guide available in 3 surface finishes

Art.-N°	Glass thickness	Material/Finish
28.550.0600.114	8-12 mm ESG	Al E6/C-0 silver anod.
28.550.0600.139	8-12 mm ESG	Al E6/C-31 stainl. steel anod.
28.550.0600.265	8-12 mm ESG	Al RAL 9005 powder coat
28.552.0600.114	8,76-12,76 mm VSG	Al E6/C-0 silver anod.
28.552.0600.139	8,76-12,76 mm VSG	Al E6/C-31 stainl. steel anod.
28.552.0600.265	8,76-12,76 mm VSG	Al RAL 9005 powder coat

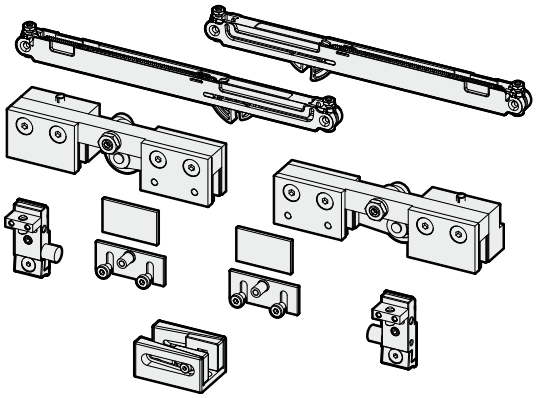

Accessory-Set for glass with SOFT-STOP

- 2 carriers, 2 track stops, 1 floor guide, 2 SOFT-STOP
- floor guide available in 3 surface finishes

Art.-N°	Glass thickness	Material/Finish
28.554.0600.114	8-12 mm ESG	Al E6/C-0 silver anod.
28.554.0600.139	8-12 mm ESG	Al E6/C-31 stainl. steel anod.
28.554.0600.265	8-12 mm ESG	Al RAL 9005 powder coat
28.556.0600.114	8,76-12,76 mm VSG	Al E6/C-0 silver anod.
28.556.0600.139	8,76-12,76 mm VSG	Al E6/C-31 stainl. steel anod.
28.556.0600.265	8,76-12,76 mm VSG	Al RAL 9005 powder coat

Note:
Leaf width: min. 490 mm
Leaf weight: max. 70 kg

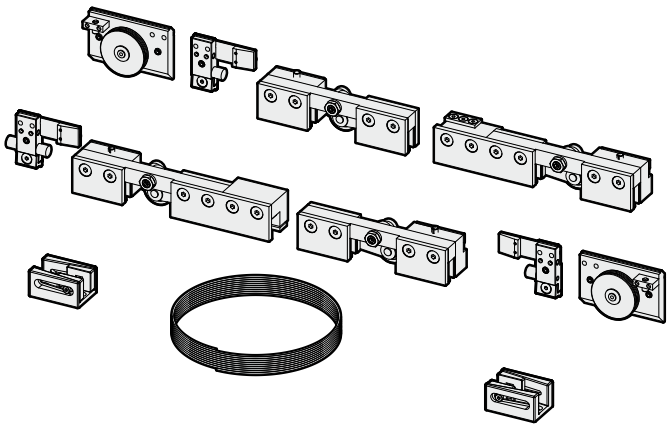

Bi-Parting-System for glass

- for synchronous opening and closing of double leaf doors
- with wire rope, plastic deflection pulleys, carriers, stops and floor guide (RAL 9005)

Art.-N°	Glass thickness	Material/Finish
28.560.0600.114	8-12 mm ESG	Al E6/C-0 silver anod.
28.562.0600.114	8,76-12,76 mm VSG	Al E6/C-0 silver anod.

Note:
Leaf width: min. 470 mm, max. 1.000 mm

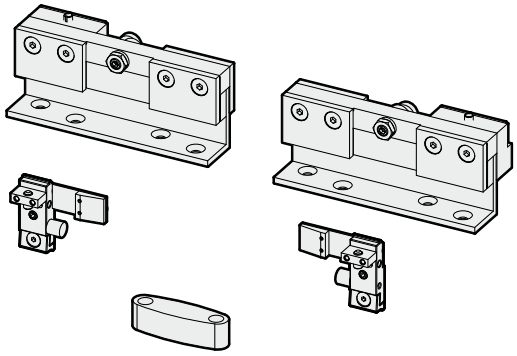

Accessory-Set for timber

- 2 carriers, 2 track stops, 1 floor guide

Art.-N°	Timber thickness	Material/Finish
28.570.0000.114	min. 35 mm	Al E6/C-0 silver anod.

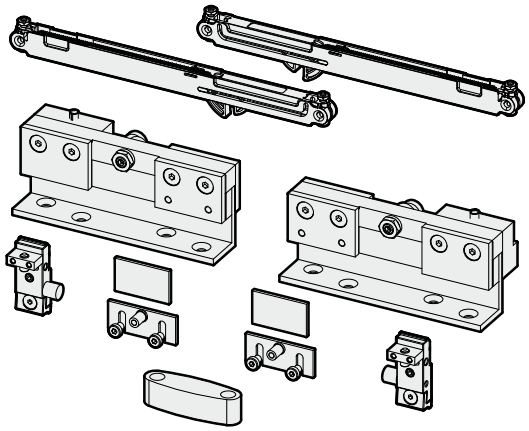

Accessory-Set for timber with SOFT-STOP

- 2 carriers, 2 track stops, 1 floor guide, 2 SOFT-STOP

Art.-N°	Timber thickness	Material/Finish
28.572.0000.114	min. 35 mm	Al E6/C-0 silver anod.

Note:
Leaf width: min. 490 mm
Leaf weight: max. 70 kg

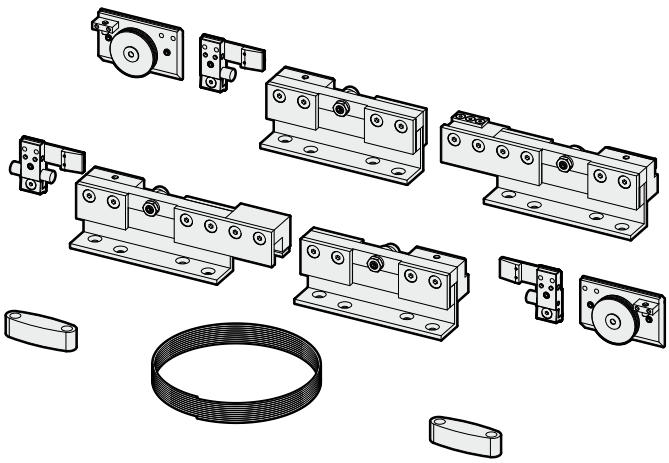

Bi-Parting-System for timber

- for synchronous opening and closing of double leaf doors
- with wire rope, plastic deflection pulleys, carriers, stops and floor guide

Art.-N°	Timber thickness	Material/Finish
28.574.0000.114	min. 35 mm	Al E6/C-0 silver anod.

Note:
Leaf width: min. 470 mm, max. 1.000 mm

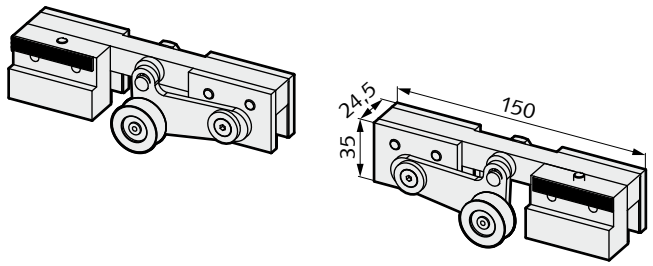

Carrier-Set for glass

Art.-N°	Glass thickness	Material/Finish
28.580.0600.114	8-12 mm ESG	Al E6/C-0 silver anod.
28.582.0600.114	8,76-12,76 mm VSG	Al E6/C-0 silver anod.

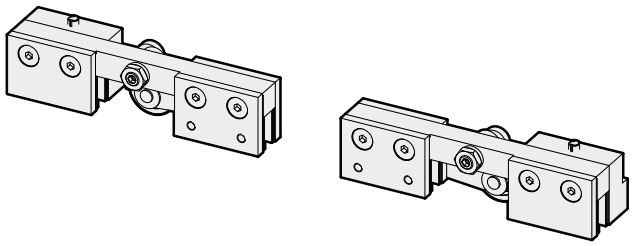

Carrier-Set for glass and SOFT-STOP

Art.-N°	Glass thickness	Material/Finish
28.584.0600.114	8-12 mm ESG	Al E6/C-0 silver anod.
28.586.0600.114	8,76-12,76 mm VSG	Al E6/C-0 silver anod.

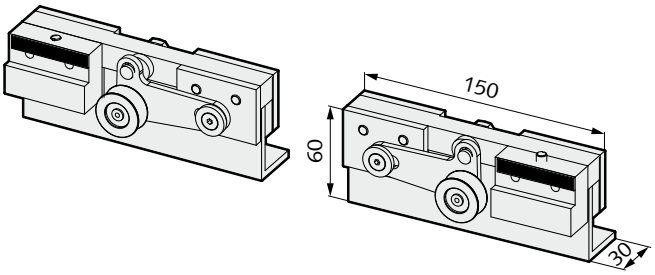

Carrier-Set for timber

Art.-N°	Timber thickness	Material/Finish
28.588.0000.114	min. 35 mm	Al E6/C-0 silver anod.

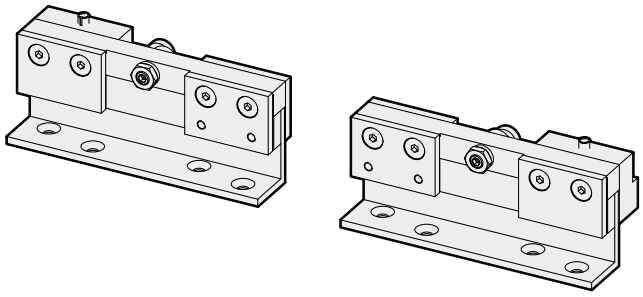

Carrier-Set for timber and SOFT-STOP

Art.-N°	Timber thickness	Material/Finish
28.590.0000.114	min. 35 mm	Al E6/C-0 silver anod.

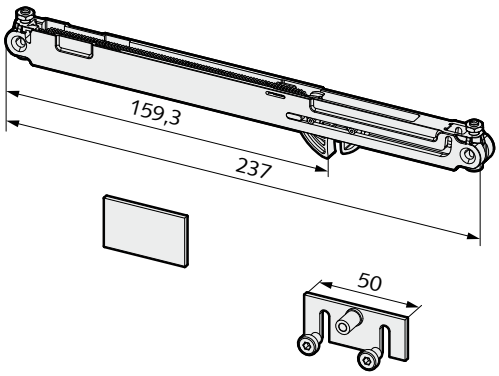

SOFT-STOP

- damped opening and closing
- **max. leaf weight 70 kg**
- single acting
- with release unit
- corrosion protection: class 0

Art.-N°	Material/Finish
28.594.0000.570	Plastic grey

Note:
Usable on both sides: min. 490 mm leaf width

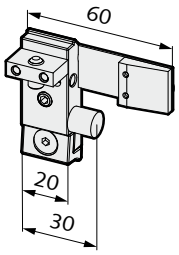

Track stop

Art.-N°	Material/Finish
28.598.0000.705	Zinc cast raw

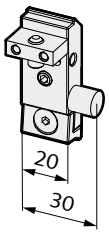

Track stop for SOFT-STOP

Art.-N°	Material/Finish
28.599.0000.705	Zinc cast raw

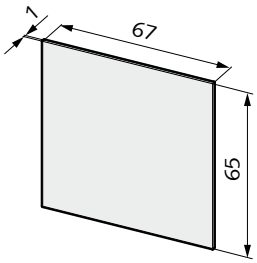

End cap

- for sliding track with cover
- self-adhesive

Art.-N°	Material/Finish
28.620.0000.114	Al E6/C-0 silver anod.
28.620.0000.139	Al E6/C-31 stainl. steel anod.

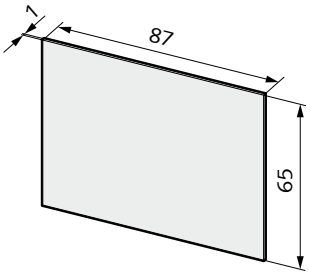

End cap

- for sliding track with sidepanel
- self-adhesive

Art.-N°	Material/Finish
28.622.0000.114	Al E6/C-0 silver anod.
28.622.0000.139	Al E6/C-31 stainl. steel anod.

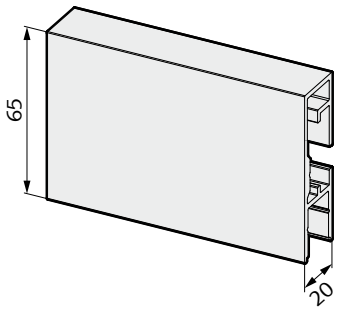

Sidepanel profile

Art.-N°	Length	Material/Finish
28.720.0000.114	6.000 mm	Al E6/C-0 silver anod.
28.720.0000.139	6.000 mm	Al E6/C-31 stainl. steel anod.
28.722.0000.114	cut to size	Al E6/C-0 silver anod.
28.722.0000.139	cut to size	Al E6/C-31 stainl. steel anod.

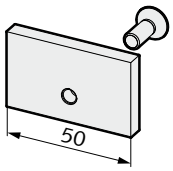

Clamping plate

- for screwing the sidepanel on the sliding track (3 pieces/metre)

Art.-N°	Material/Finish
28.730.0000.114	Al E6/C-0 silver anod.

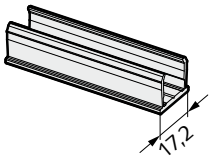

Screen protection profile

- to close the sidepanel profile in door area

Art.-N°	Length	Material/Finish
28.750.0000.114	6.000 mm	Al E6/C-0 silver anod.
28.750.0000.139	6.000 mm	Al E6/C-31 stainl. steel anod.
28.752.0000.114	cut to size	Al E6/C-0 silver anod.
28.752.0000.139	cut to size	Al E6/C-31 stainl. steel anod.

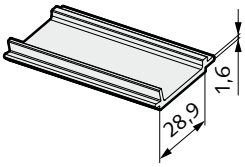

Inlayer profile

- screen protection to close the running way

Art.-N°	Length	Material/Finish
28.755.0000.114	6.000 mm	Al E6/C-0 silver anod.
28.755.0000.139	6.000 mm	Al E6/C-31 stainl. steel anod.
28.757.0000.114	cut to size	Al E6/C-0 silver anod.
28.757.0000.139	cut to size	Al E6/C-31 stainl. steel anod.

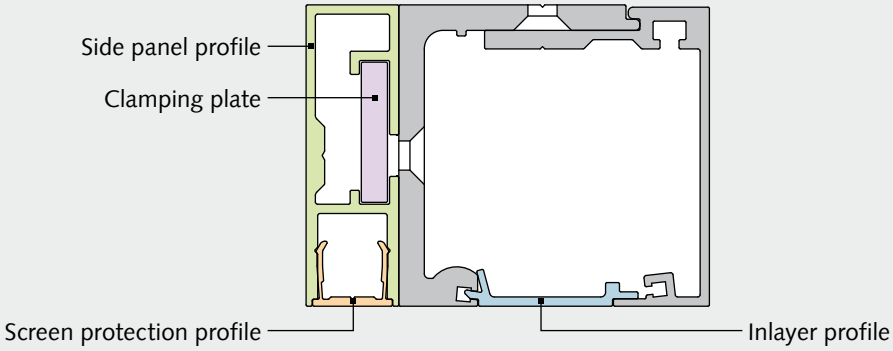

NOVA 180

New opportunities.
Up to 180 kg leaf weight.

Technical Details:

Glass:	8, 10 and 12 mm ESG 8,76, 10,76 mm and 12,76 mm VSG
Leaf weight:	max. 180 kg (ESG made of uncoated Float glass)
Profile height:	65 mm
Sliding track:	drilled every 340 mm / Ø 6,3 mm
Height adjustability:	±5 mm (carrier)
Test:	100.000 cycles according to DIN EN 1527 / class 6
Corrosion protection:	according to DIN EN 1670 / class 4

Features:
- suitable for single and double leaf doors
- wall or ceiling installation
- application with side panel possible

Materials and surfaces:

Aluminium	E6/C-0 silver anodized	114
	E6/C-31 stainless steel anodized	139

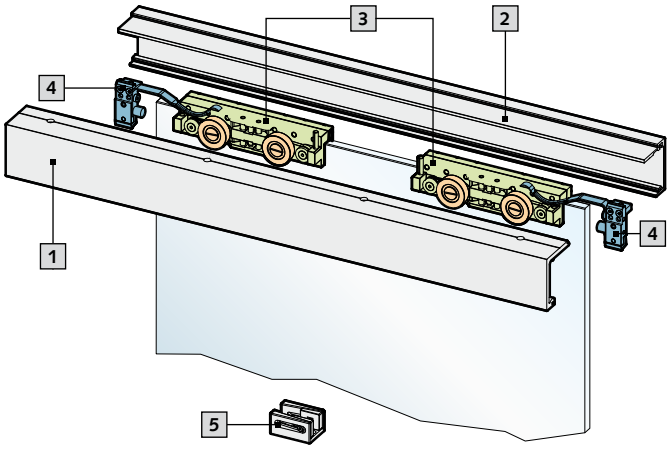

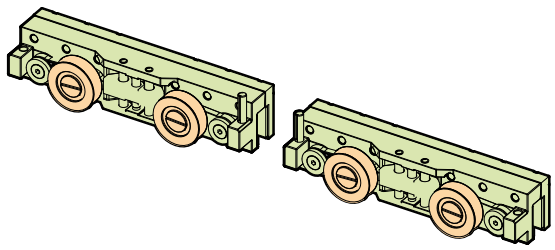

Components:
1. sliding track, 2. cover, 3. carrier, 4. track stop,
5. floor guide (RAL 9005 / standard)

Carrier with double roller for absorption of high loads with very good smoothness.

Sectional view

Sliding door leaf

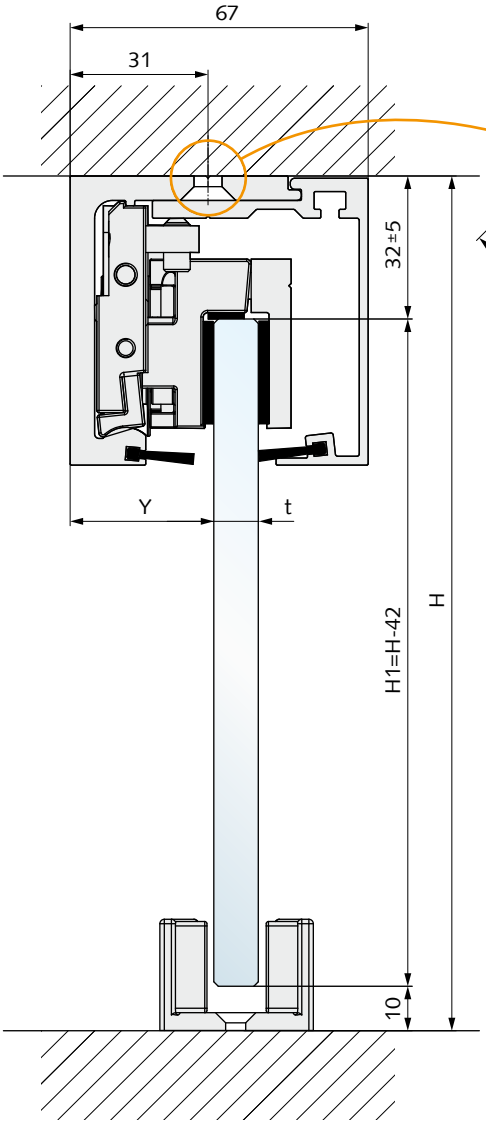

Figure shows ceiling installation

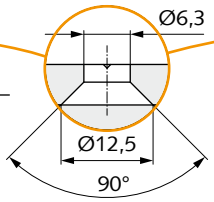

Sliding door leaf with side panel

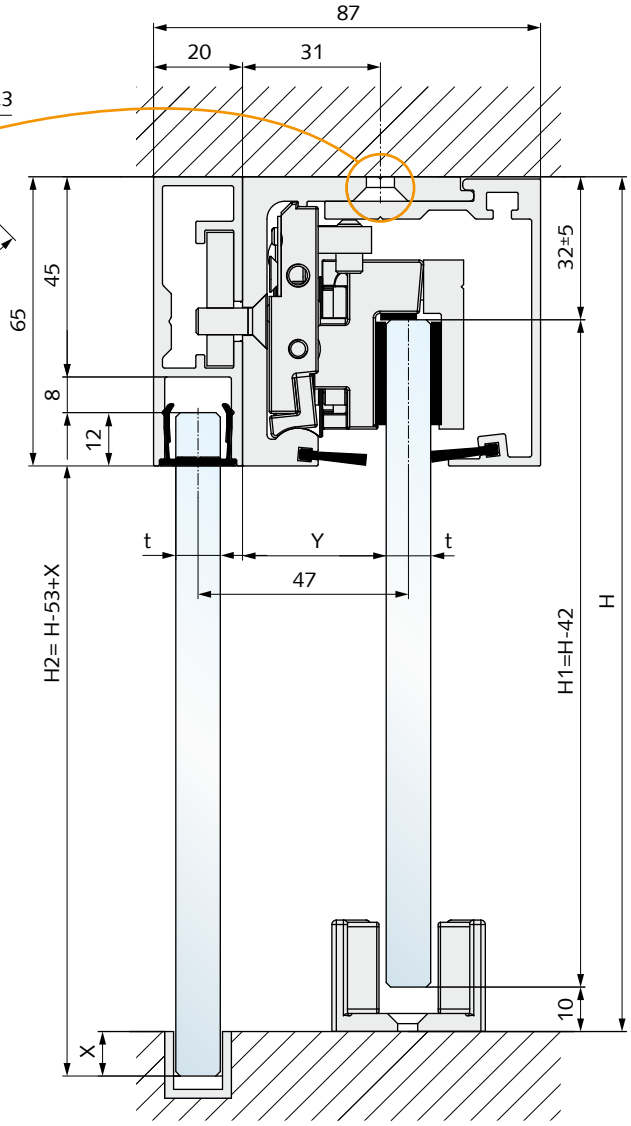

Figure shows ceiling installation

Calculation of the glass height:
Sliding door leaf: H1 = H - 42 mm
Side panel: H2 = H - 53 mm + insert to floor X

Information:
When using a sliding door with side panel, please calculate an overlap of 30 mm.

t mm	Y mm
8,00	33,00
8,76	33,00
10,00	32,00
10,76	32,00
12,00	31,00
12,76	31,00

Installation situations

Sliding door, single leaf

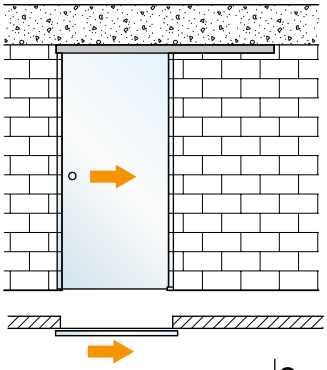

Components:	Quantity:	Details:
Sliding door system	1 piece	Page 22
End caps	2 pieces	Page 24

Sliding door, single leaf with side panel

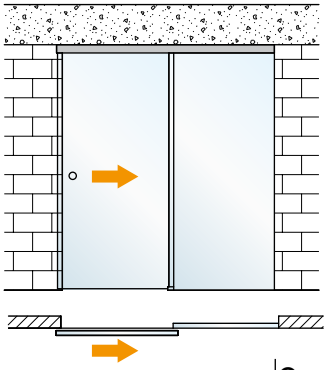

Components:	Quantity:	Details:
Sliding track for ceiling installation for side panel	1 piece	Page 23
Cover	1 piece	Page 23
Accessory set	1 piece	Page 24
End caps	2 pieces	Page 24
Side panel profile with clamping plates	1 piece	Page 25
Screen protection profile	1 piece	Page 25
(Inlayer profile on request)	1 piece	Page 25

Sliding door, double leaf

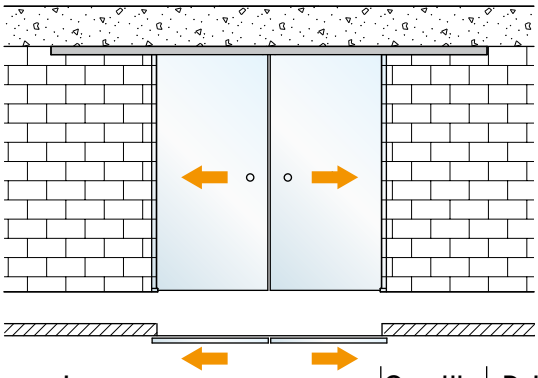

Components:	Quantity:	Details:
Sliding track	1 piece	Page 23
Cover	1 piece	Page 23
Accessory set	2 pieces	Page 24
End caps	2 pieces	Page 24

Sliding door, double leaf with side panel

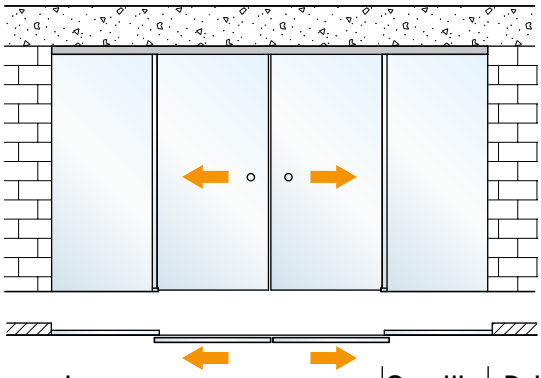

Components:	Quantity:	Details:
Sliding track for ceiling installation for side panel	1 piece	Seite 23
Cover	1 piece	Page 23
Accessory set	2 pieces	Page 24
End caps	2 pieces	Page 24
Side panel profile with clamping plates	1 piece	Page 25
Screen protection profile	1 piece	Page 25
(Inlayer profile on request)	1 piece	Page 25

Accessories:
Sliding door flush handles, door handles, locks, floor guide, floor stop and seals see pages 36 to 42.

Sliding door system for ceiling installation

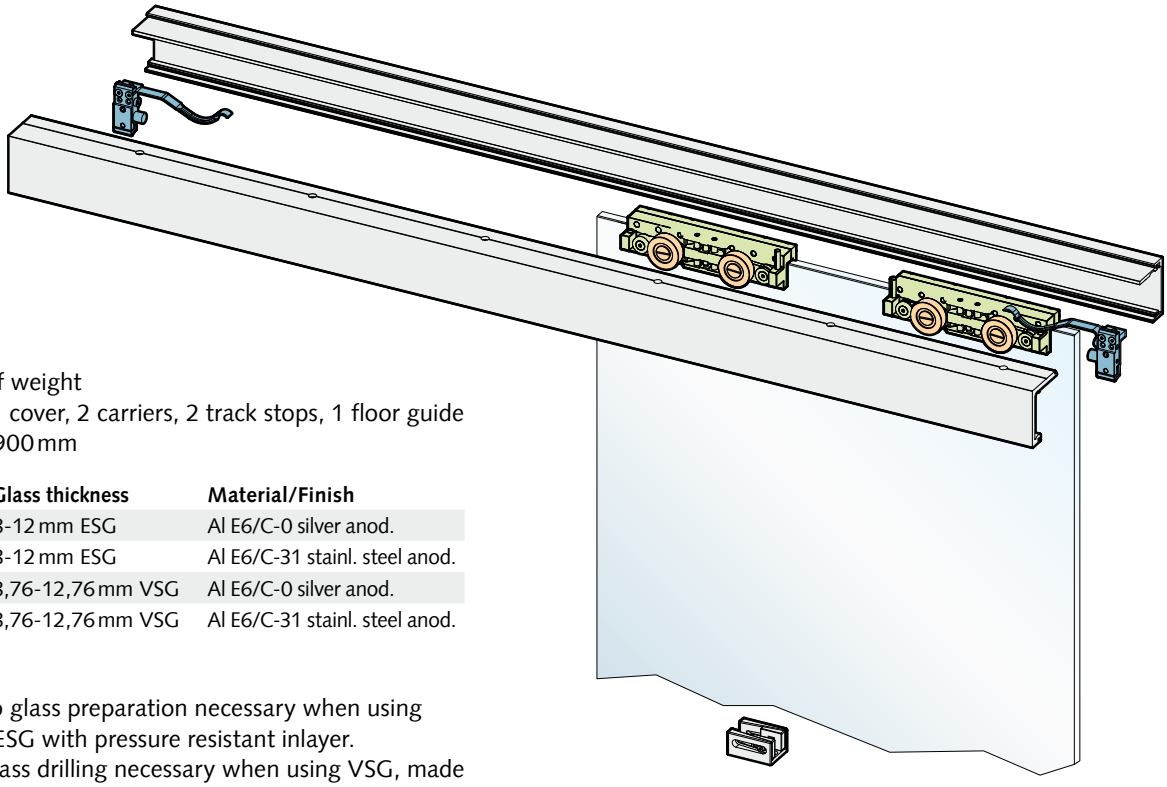

- max. 180 kg leaf weight
- 1 sliding track, 1 cover, 2 carriers, 2 track stops, 1 floor guide
- Sliding track: 1.900 mm

Art.-N°	Glass thickness	Material/Finish
28.601.0600.114	8-12 mm ESG	Al E6/C-0 silver anod.
28.601.0600.139	8-12 mm ESG	Al E6/C-31 stainl. steel anod.
28.605.0600.114	8,76-12,76 mm VSG	Al E6/C-0 silver anod.
28.605.0600.139	8,76-12,76 mm VSG	Al E6/C-31 stainl. steel anod.

Note:
Carrier for ESG: No glass preparation necessary when using VSG, made of 2 x ESG with pressure resistant inlayer.
Carrier for VSG: Glass drilling necessary when using VSG, made of 2 x ESG with standard PVB inlayer (please see page 43).

Sliding door system for wall installation

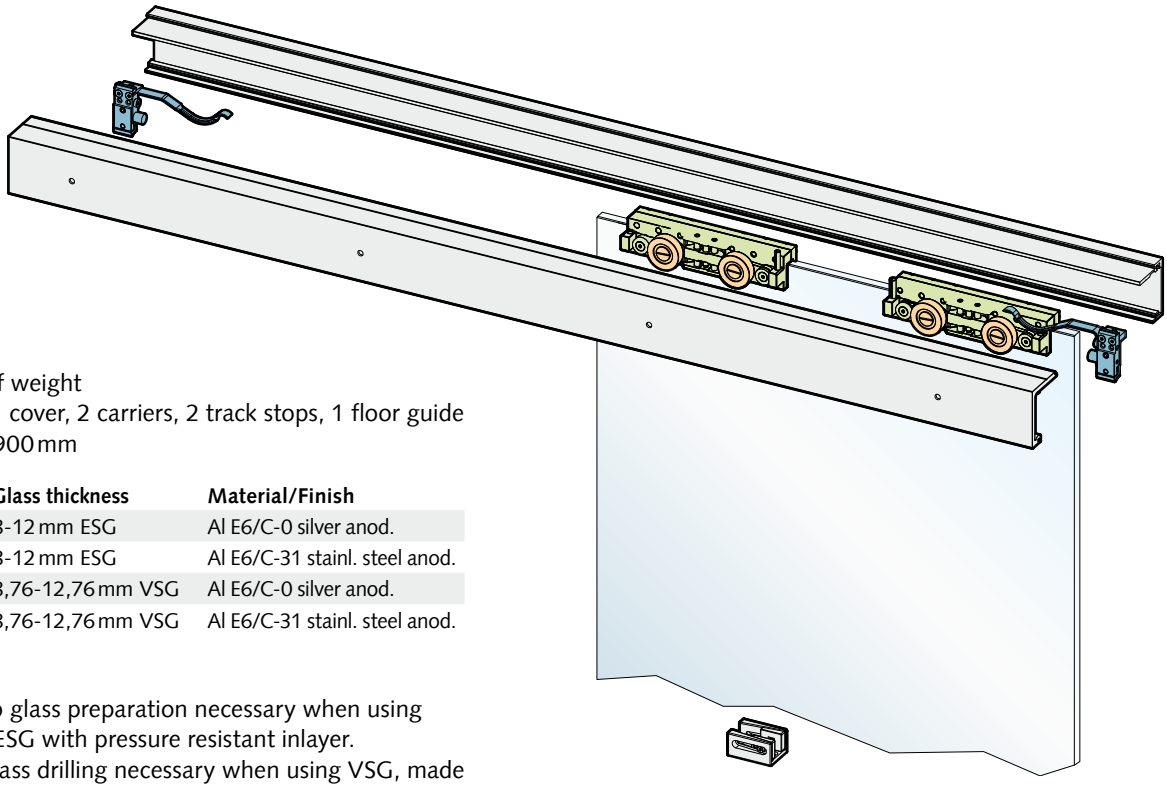

- max. 180 kg leaf weight
- 1 sliding track, 1 cover, 2 carriers, 2 track stops, 1 floor guide
- Sliding track: 1.900 mm

Art.-N°	Glass thickness	Material/Finish
28.603.0600.114	8-12 mm ESG	Al E6/C-0 silver anod.
28.603.0600.139	8-12 mm ESG	Al E6/C-31 stainl. steel anod.
28.607.0600.114	8,76-12,76 mm VSG	Al E6/C-0 silver anod.
28.607.0600.139	8,76-12,76 mm VSG	Al E6/C-31 stainl. steel anod.

Note:
Carrier for ESG: No glass preparation necessary when using VSG, made of 2 x ESG with pressure resistant inlayer.
Carrier for VSG: Glass drilling necessary when using VSG, made of 2 x ESG with standard PVB inlayer (please see page 43).

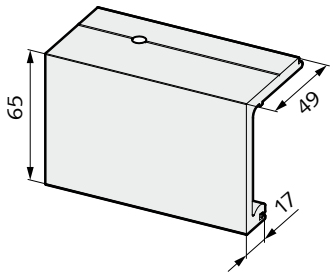

Sliding track

- for ceiling installation

Art.-N°	Length	Material/Finish
28.700.0000.114	6.000 mm	Al E6/C-0 silver anod.
28.700.0000.139	6.000 mm	Al E6/C-31 stainl. steel anod.
28.701.0000.114	1.900 mm	Al E6/C-0 silver anod.
28.701.0000.139	1.900 mm	Al E6/C-31 stainl. steel anod.
28.702.0000.114	cut to size	Al E6/C-0 silver anod.
28.702.0000.139	cut to size	Al E6/C-31 stainl. steel anod.

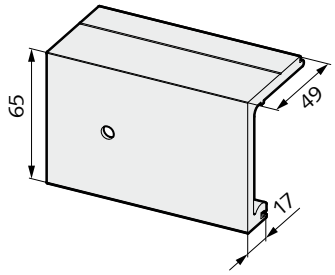

Sliding track

- for wall installation

Art.-N°	Length	Material/Finish
28.710.0000.114	6.000 mm	Al E6/C-0 silver anod.
28.710.0000.139	6.000 mm	Al E6/C-31 stainl. steel anod.
28.711.0000.114	1.900 mm	Al E6/C-0 silver anod.
28.711.0000.139	1.900 mm	Al E6/C-31 stainl. steel anod.
28.712.0000.114	cut to size	Al E6/C-0 silver anod.
28.712.0000.139	cut to size	Al E6/C-31 stainl. steel anod.

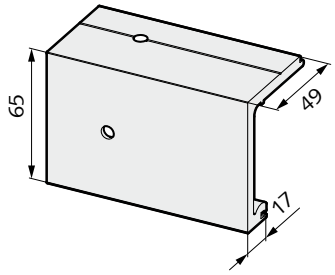

Sliding track

- for ceiling installation for sidepanel

Art.-N°	Length	Material/Finish
28.714.0000.114	6.000 mm	Al E6/C-0 silver anod.
28.714.0000.139	6.000 mm	Al E6/C-31 stainl. steel anod.
28.716.0000.114	cut to size	Al E6/C-0 silver anod.
28.716.0000.139	cut to size	Al E6/C-31 stainl. steel anod.

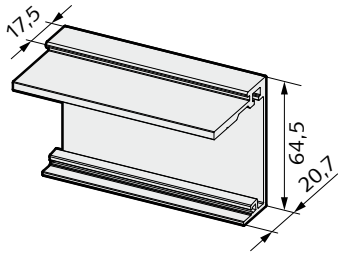

Cover

Art.-N°	Length	Material/Finish
28.740.0000.114	6.000 mm	Al E6/C-0 silver anod.
28.740.0000.139	6.000 mm	Al E6/C-31 stainl. steel anod.
28.741.0000.114	1.900 mm	Al E6/C-0 silver anod.
28.741.0000.139	1.900 mm	Al E6/C-31 stainl. steel anod.
28.742.0000.114	cut to size	Al E6/C-0 silver anod.
28.742.0000.139	cut to size	Al E6/C-31 stainl. steel anod.

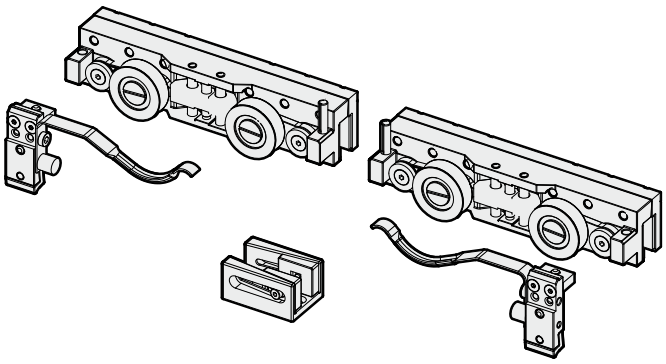

Accessory-Set

- 2 carriers, 2 track stops, 1 floor guide
- floor guide available in 3 surface finishes

Art.-N°	Glass thickness	Material/Finish
28.760.0600.114	8-12 mm ESG	Al E6/C-0 silver anod.
28.760.0600.139	8-12 mm ESG	Al E6/C-31 stainl. steel anod.
28.760.0600.265	8-12 mm ESG	Al RAL 9005 powder coat
28.762.0600.114	8,76-12,76 mm VSG	Al E6/C-0 silver anod.
28.762.0600.139	8,76-12,76 mm VSG	Al E6/C-31 stainl. steel anod.
28.762.0600.265	8,76-12,76 mm VSG	Al RAL 9005 powder coat

Note:
Carrier for ESG: No glass preparation necessary when using VSG, made of 2 x ESG with pressure resistant inlayer.
Carrier for VSG: Glass drilling necessary when using VSG, made of 2 x ESG with standard PVB inlayer (please see page 43).

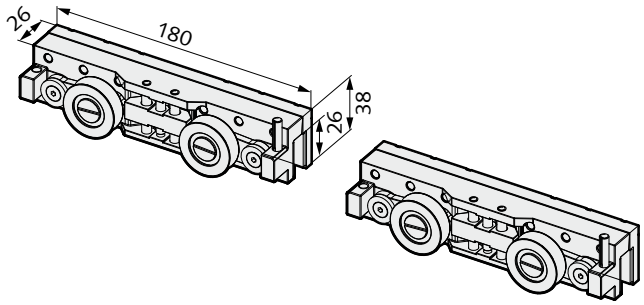

Carrier-Set

Art.-N°	Glass thickness	Material/Finish
28.770.0600.705	8-12 mm ESG	Zinc cast raw
28.772.0600.705	8,76-12,76 mm VSG	Zinc cast raw

Note:
Carrier for ESG: No glass preparation necessary when using VSG, made of 2 x ESG with pressure resistant inlayer.
Carrier for VSG: Glass drilling necessary when using VSG, made of 2 x ESG with standard PVB inlayer (please see page 43).

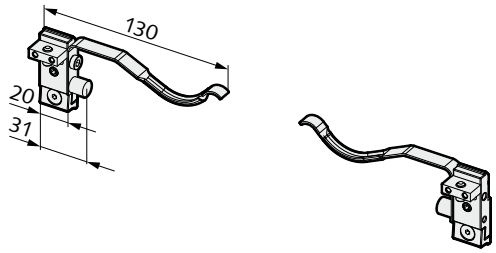

Track stop

Art.-N°	Material/Finish
28.780.0000.705	Zinc cast raw

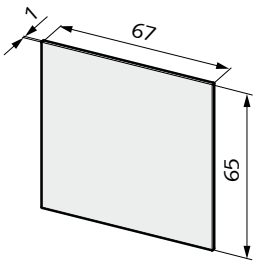

End cap

- for sliding track with cover
- self-adhesive

Art.-N°	Material/Finish
28.620.0000.114	Al E6/C-0 silver anod.
28.620.0000.139	Al E6/C-31 stainl. steel anod.

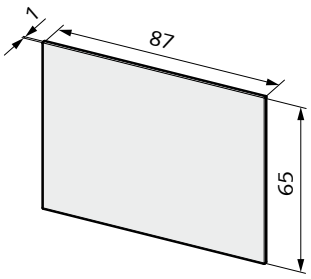

End cap

- for sliding track with sidepanel
- self-adhesive

Art.-N°	Material/Finish
28.622.0000.114	Al E6/C-0 silver anod.
28.622.0000.139	Al E6/C-31 stainl. steel anod.

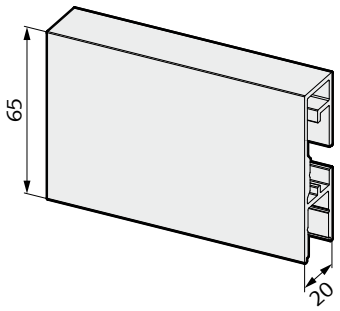

Sidepanel profile

Art.-N°	Length	Material/Finish
28.720.0000.114	6.000 mm	Al E6/C-0 silver anod.
28.720.0000.139	6.000 mm	Al E6/C-31 stainl. steel anod.
28.722.0000.114	cut to size	Al E6/C-0 silver anod.
28.722.0000.139	cut to size	Al E6/C-31 stainl. steel anod.

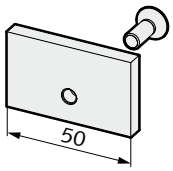

Clamping plate

- for scewing the sidepanel on the sliding track (3 pieces/metre)

Art.-N°	Material/Finish
28.730.0000.114	Al E6/C-0 silver anod.

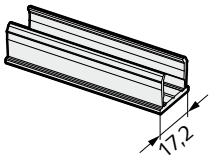

Screen protection profile

- to close the sidepanel profile in door area

Art.-N°	Length	Material/Finish
28.750.0000.114	6.000 mm	Al E6/C-0 silver anod.
28.750.0000.139	6.000 mm	Al E6/C-31 stainl. steel anod.
28.752.0000.114	cut to size	Al E6/C-0 silver anod.
28.752.0000.139	cut to size	Al E6/C-31 stainl. steel anod.

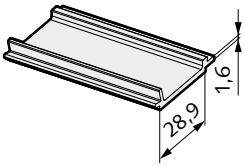

Inlayer profile

- screen protection to close the running way

Art.-N°	Length	Material/Finish
28.755.0000.114	6.000 mm	Al E6/C-0 silver anod.
28.755.0000.139	6.000 mm	Al E6/C-31 stainl. steel anod.
28.757.0000.114	cut to size	Al E6/C-0 silver anod.
28.757.0000.139	cut to size	Al E6/C-31 stainl. steel anod.

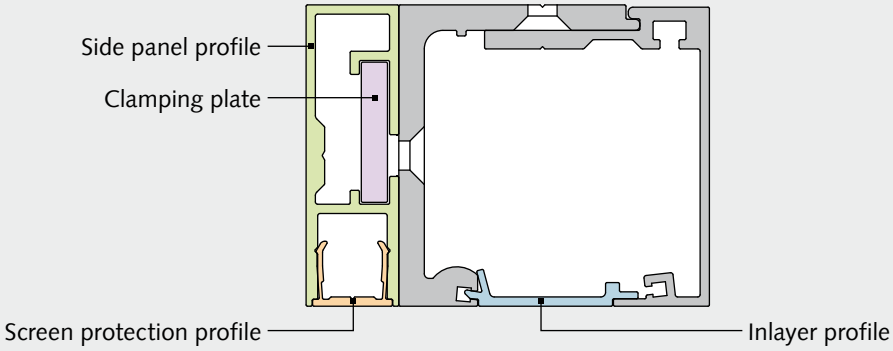

PURA 150

Reliable quality.
Up to 150 kg leaf weight.

Technical Details:

Glass:	8, 10 and 12 mm ESG 8,76 and 10,76 mm VSG
Timber:	min. 30 mm door thickness
Leaf weight:	max. 150 kg (ESG made of uncoated Float glass)
Profile height:	120 mm
Sliding track:	drilled every 400 mm / Ø 6,5 mm
Height adjustability:	±5 mm (carrier)
Test:	100.000 cycles according to DIN EN 1527 / class 6
Corrosion protection:	according to DIN EN 1670 / class 4

Features:

- suitable for single and double leaf doors
- wall or ceiling installation
- installation of the side panels in/on the sliding track
- damped opening and closing SOFT-STOP (up to 100 kg)
- possibility for subsequent installation of the SOFT-STOP
- manual bi-parting-system (for double leaf doors)
- use with Low-Energy-Drive possible

Materials and surfaces:

Aluminium	E6/C-0 silver anodized	114
	E6/C-31 stainless steel anodized	139

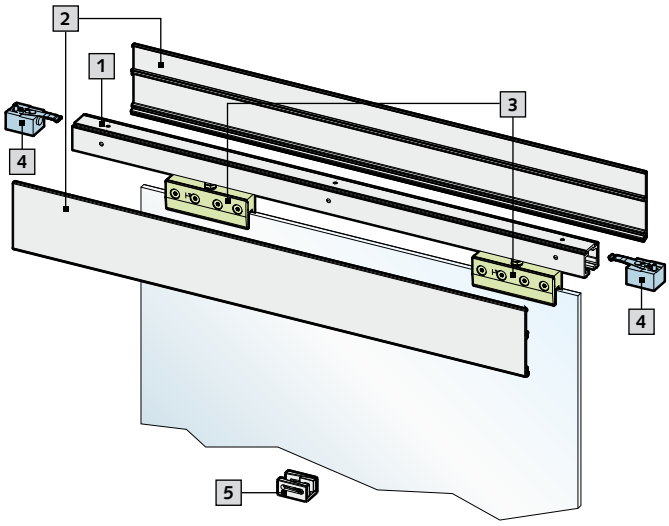

Components:
1. sliding track, 2. cover, 3. carrier, 4. track stop,
5. floor guide (RAL 9005 / standard)

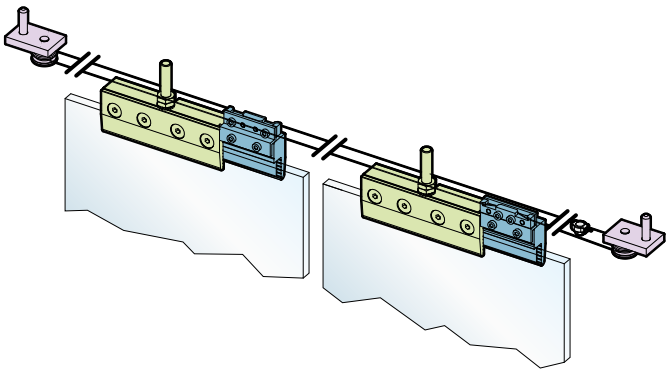

The **Bi-Parting-System** allows a synchronic movement of two leaves.

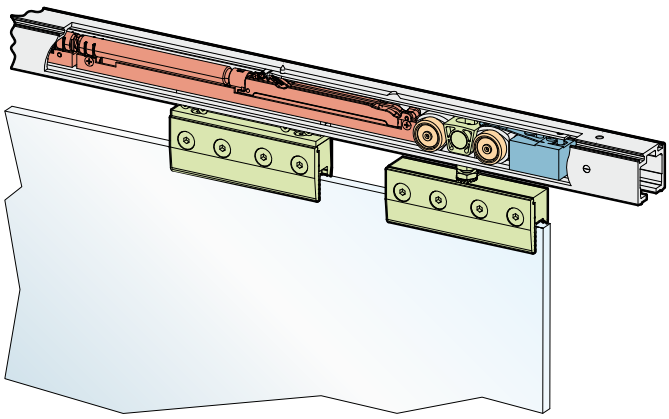

The door is gently damped and guided into the final position using the **SOFT-STOP**.

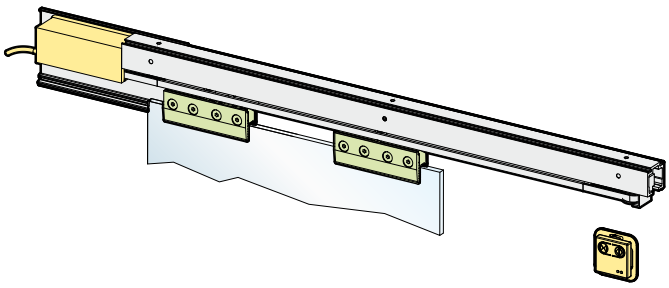

The **Low-Energy-Drive** automatically opens and closes the door at the push of a button.

Sectional view

Sliding door leaf

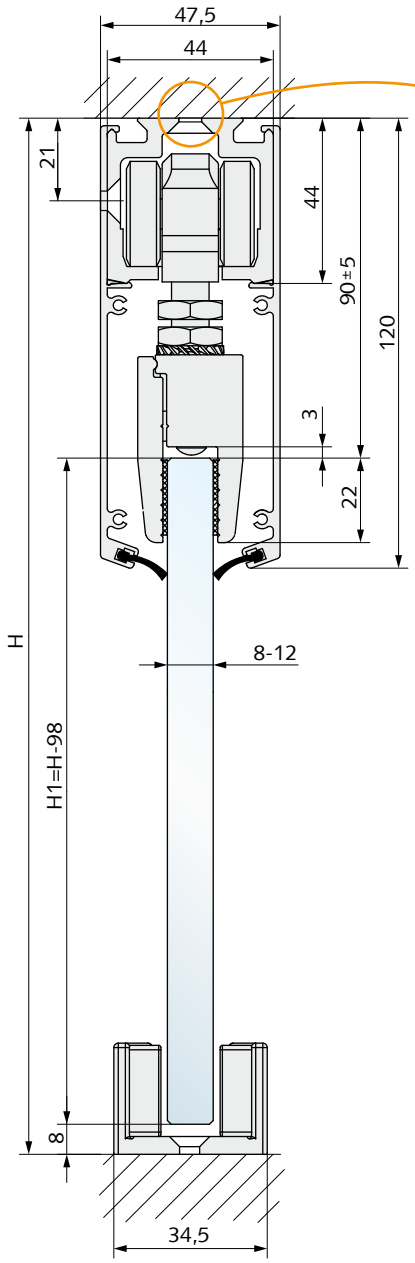

Figure shows ceiling installation

Sliding door leaf with side panel

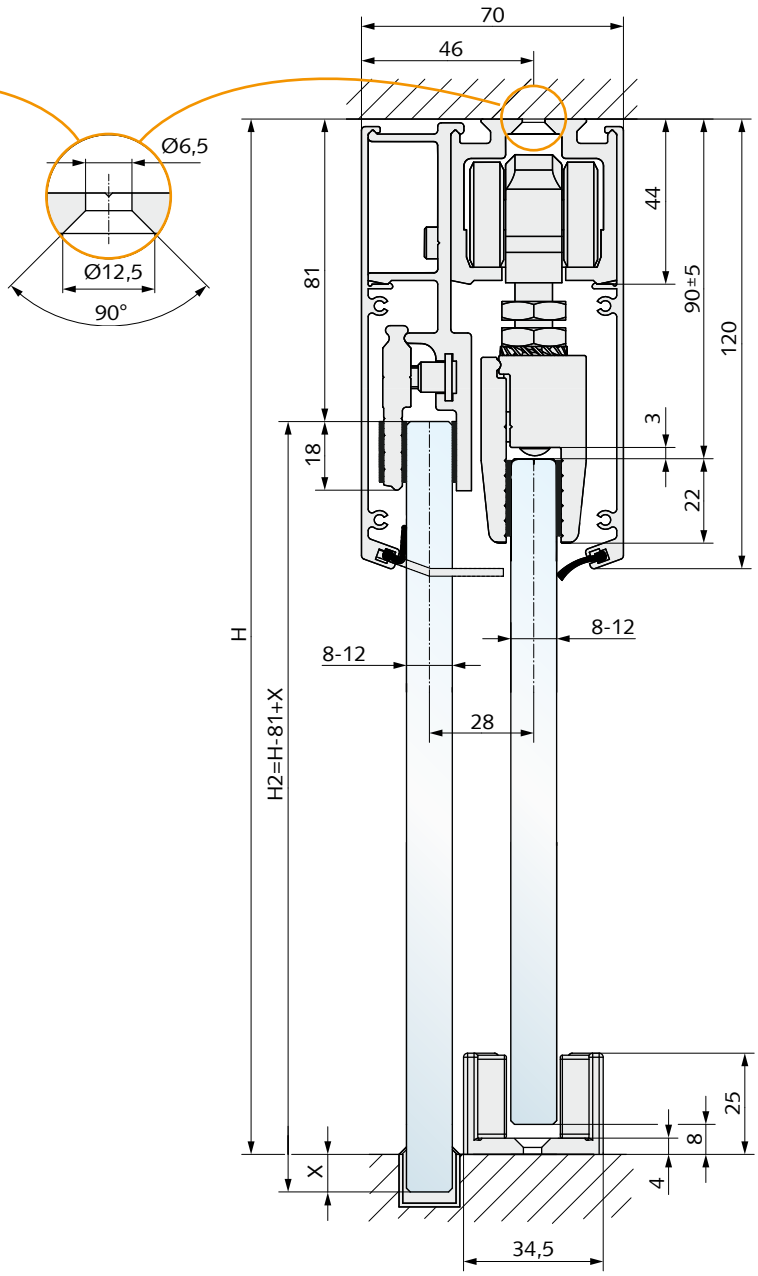

Figure shows ceiling installation

Calculation of the glass height:
Sliding door leaf:: H1 = H - 98 mm
Side panel: H2 = H - 81 mm + insert to floor X

Information:
When using a sliding door with side panel, please calculate an overlap of 30 mm.

Installation situations

Sliding door, single leaf

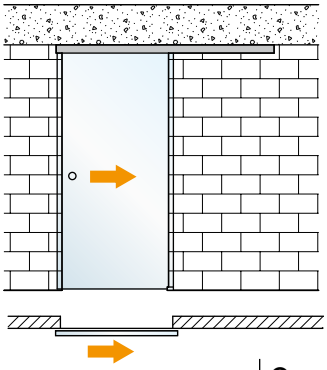

Components:	Quantity:	Details:
Sliding door system *or* Sliding door system with SOFT-STOP	1 piece	Page 30 Page 31
End caps	2 pieces	Page 33
(Low-Energy-Drive on request)	1 piece	Page 35

Sliding door, single leaf with side panel

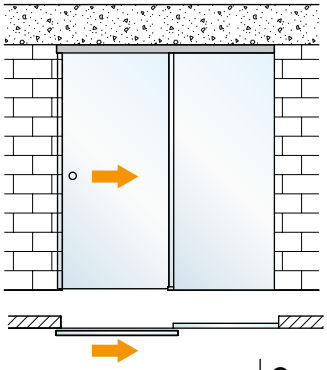

Components:	Quantity:	Details:
Sliding door system *or* Sliding door system with SOFT-STOP	1 piece	Page 30 Page 31
End caps	2 pieces	Page 34
Side panel profile	1 piece	Page 34
Screen protection profile	1 piece	Page 35

Sliding door, double leaf

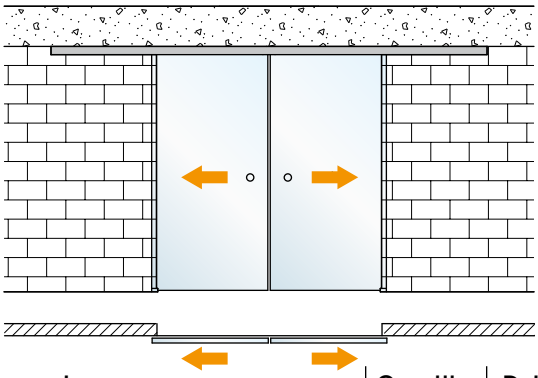

Components:	Quantity:	Details:
Sliding track	1 piece	Page 32
Cover	1-2 pieces	Page 32
Accessory set	2 pieces	Page 32
End caps	2 pieces	Page 33
(SOFT-STOP on request)	4 pieces	Page 33
(Bi-Parting-System on request)	1 piece	Page 35
(Low-Energy-Drive on request)	1 piece	Page 35

Sliding door, double leaf with side panel

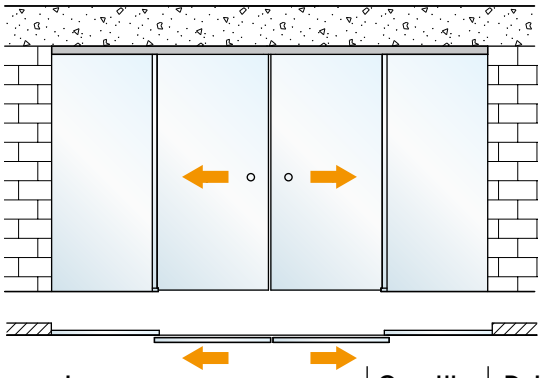

Components:	Quantity:	Details:
Sliding track	1 piece	Page 32
Cover	1-2 pieces	Page 32
Accessory set	2 pieces	Page 32
End caps	2 pieces	Page 34
Side panel profile with clamping plates	2 pieces	Page 34
Screen protection profile	2 pieces	Page 35
(SOFT-STOP on request)	4 pieces	Page 33
(Bi-Parting-System on request)	1 piece	Page 35

Accessories:
Sliding door flush handles, door handles, locks, floor guide, floor stop and seals see pages 36 to 42.

Information: SOFT-STOP, Bi-Parting-System and Low-Energy-Drive cannot be combined with each other!

Sliding door system for ceiling installation

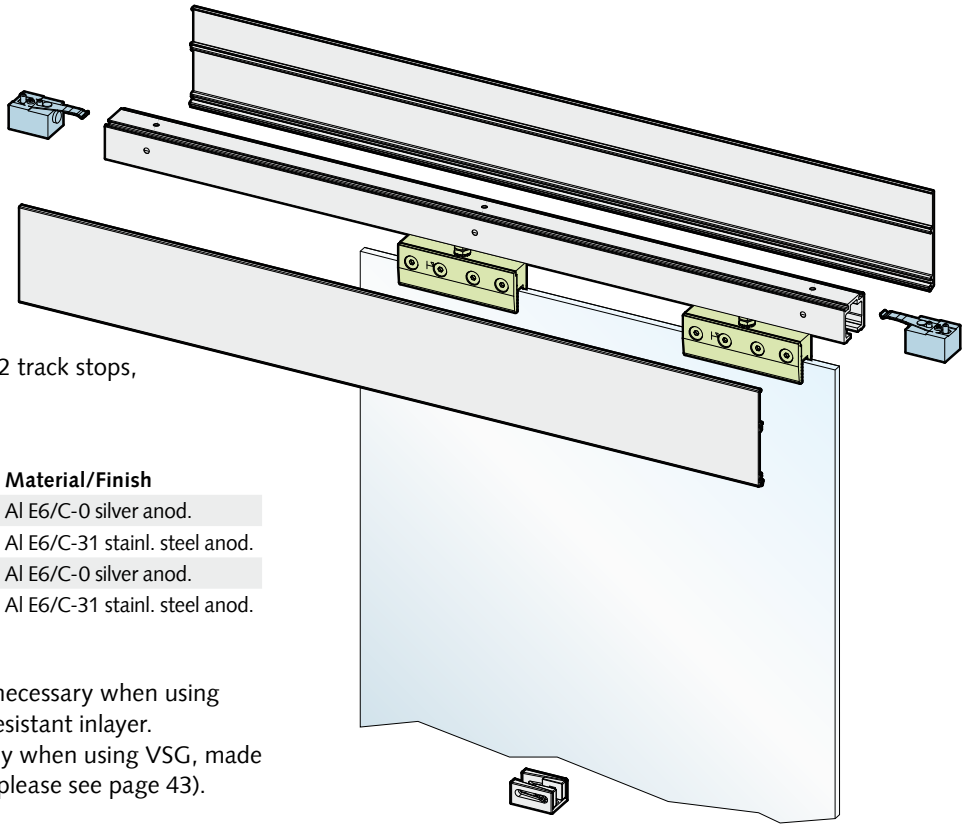

- max. 150 kg leaf weight
- 1 sliding track, 2 covers, 2 carriers, 2 track stops, 1 floor guide
- Sliding track: 1.900 mm

Art.-N°	Glass thickness	Material/Finish
28.101.0600.114	8-12 mm ESG	Al E6/C-0 silver anod.
28.101.0600.139	8-12 mm ESG	Al E6/C-31 stainl. steel anod.
28.105.0500.114	8,76-10,76 mm VSG	Al E6/C-0 silver anod.
28.105.0500.139	8,76-10,76 mm VSG	Al E6/C-31 stainl. steel anod.

Note:
Carrier for ESG: No glass preparation necessary when using VSG, made of 2 x ESG with pressure resistant inlayer.
Carrier for VSG: Glass drilling necessary when using VSG, made of 2 x ESG with standard PVB inlayer (please see page 43).

Sliding door system for wall installation

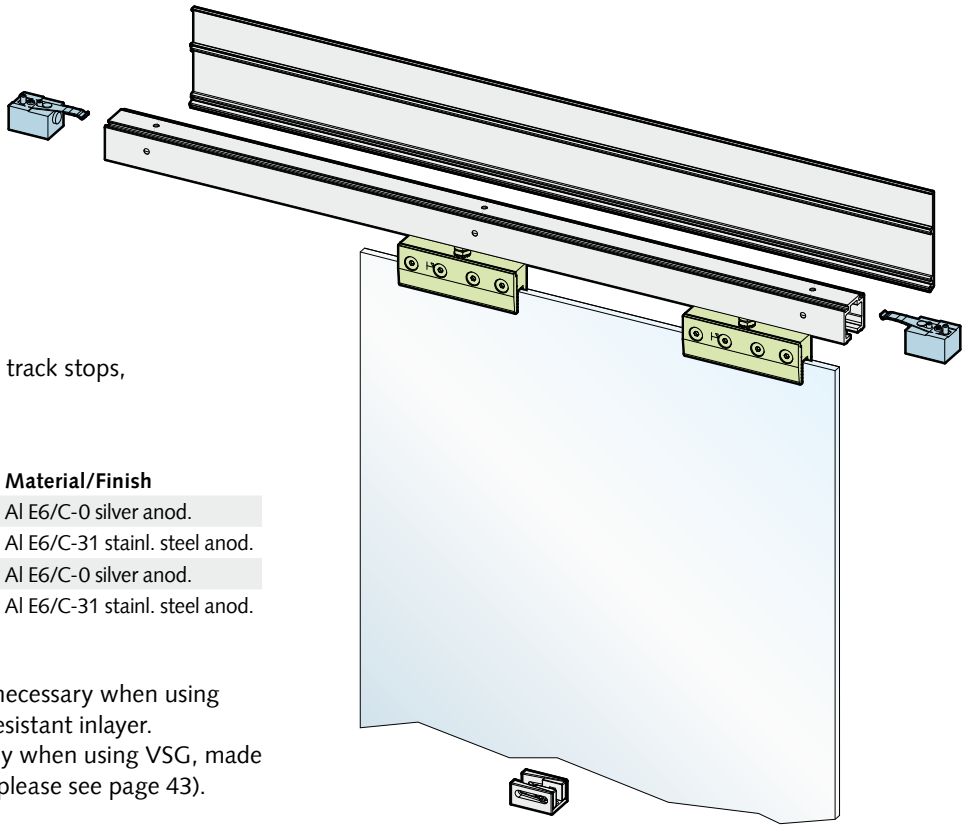

- max. 150 kg leaf weight
- 1 sliding track, 1 cover, 2 carriers, 2 track stops, 1 floor guide
- Sliding track: 1.900 mm

Art.-N°	Glass thickness	Material/Finish
28.103.0600.114	8-12 mm ESG	Al E6/C-0 silver anod.
28.103.0600.139	8-12 mm ESG	Al E6/C-31 stainl. steel anod.
28.107.0500.114	8,76-10,76 mm VSG	Al E6/C-0 silver anod.
28.107.0500.139	8,76-10,76 mm VSG	Al E6/C-31 stainl. steel anod.

Note:
Carrier for ESG: No glass preparation necessary when using VSG, made of 2 x ESG with pressure resistant inlayer.
Carrier for VSG: Glass drilling necessary when using VSG, made of 2 x ESG with standard PVB inlayer (please see page 43).

Sliding door system for ceiling installation with SOFT-STOP

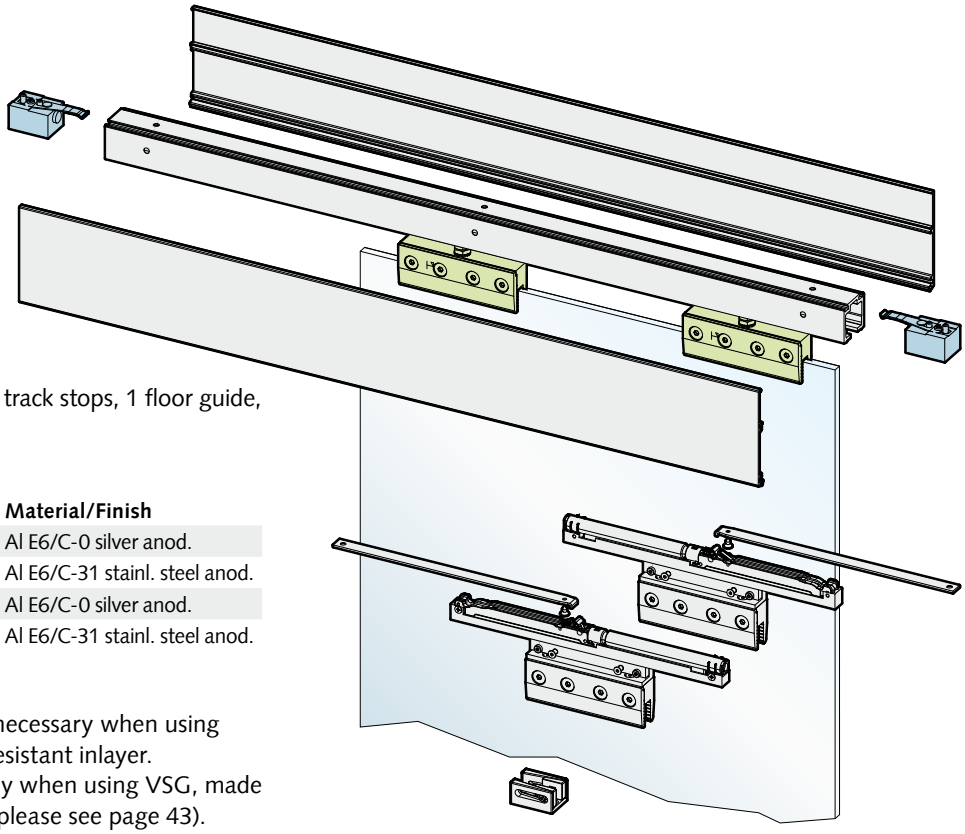

- max. 100 kg leaf weight
- with damped opening and closing
- 1 sliding track, 2 covers, 2 carriers, 2 track stops, 1 floor guide, 2 SOFT-STOP
- Sliding track: 1.900 mm

Art.-N°	Glass thickness	Material/Finish
28.111.0600.114	8-12 mm ESG	Al E6/C-0 silver anod.
28.111.0600.139	8-12 mm ESG	Al E6/C-31 stainl. steel anod.
28.115.0500.114	8,76-10,76 mm VSG	Al E6/C-0 silver anod.
28.115.0500.139	8,76-10,76 mm VSG	Al E6/C-31 stainl. steel anod.

Note:
Carrier for ESG: No glass preparation necessary when using VSG, made of 2 x ESG with pressure resistant inlayer.
Carrier for VSG: Glass drilling necessary when using VSG, made of 2 x ESG with standard PVB inlayer (please see page 43).

Sliding door system for wall installation with SOFT-STOP

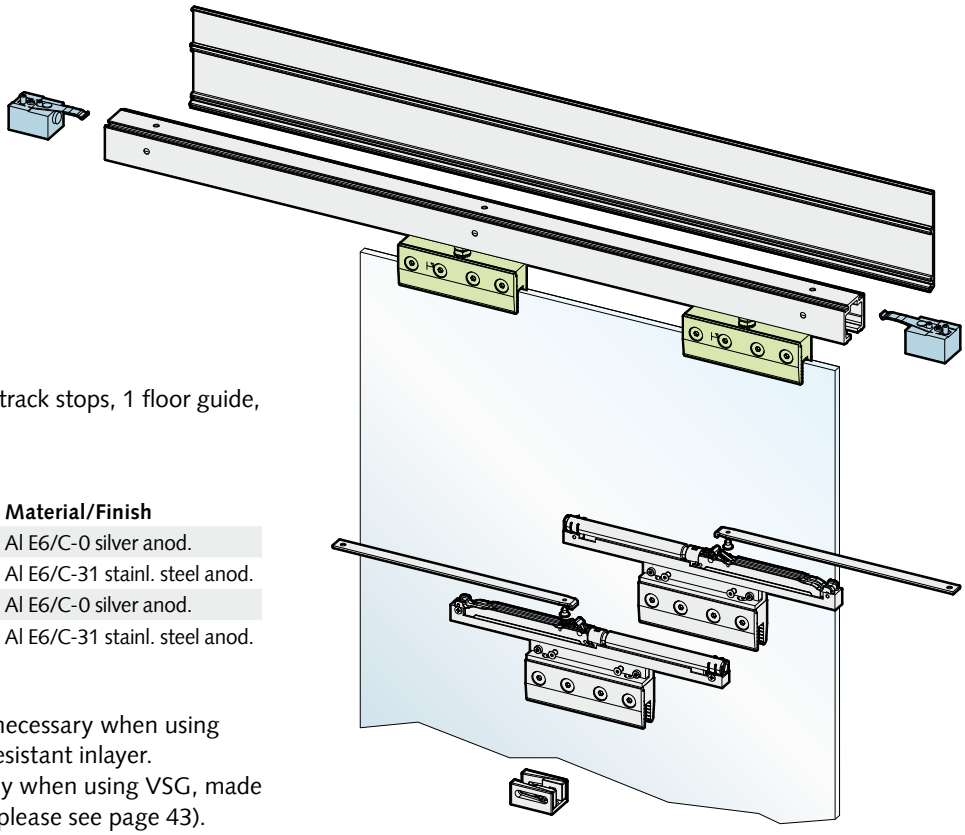

- max. 100 kg leaf weight
- with damped opening and closing
- 1 sliding track, 1 cover, 2 carriers, 2 track stops, 1 floor guide, 2 SOFT-STOP
- Sliding track: 1.900 mm

Art.-N°	Glass thickness	Material/Finish
28.113.0600.114	8-12 mm ESG	Al E6/C-0 silver anod.
28.113.0600.139	8-12 mm ESG	Al E6/C-31 stainl. steel anod.
28.117.0500.114	8,76-10,76 mm VSG	Al E6/C-0 silver anod.
28.117.0500.139	8,76-10,76 mm VSG	Al E6/C-31 stainl. steel anod.

Note:
Carrier for ESG: No glass preparation necessary when using VSG, made of 2 x ESG with pressure resistant inlayer.
Carrier for VSG: Glass drilling necessary when using VSG, made of 2 x ESG with standard PVB inlayer (please see page 43).

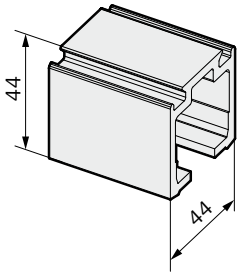

Sliding track

Art.-N°	Length	Material/Finish
28.300.0000.114	6.000 mm	Al E6/C-0 silver anod.
28.301.0000.114	1.900 mm	Al E6/C-0 silver anod.
28.302.0000.114	cut to size	Al E6/C-0 silver anod.

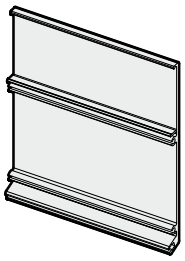

Cover

- to clip on
- with groove for screen protection profile and seals

Art.-N°	Length	Material/Finish
28.140.0000.114	6.000 mm	Al E6/C-0 silver anod.
28.140.0000.139	6.000 mm	Al E6/C-31 stainl. steel anod.
28.141.0000.114	1.900 mm	Al E6/C-0 silver anod.
28.141.0000.139	1.900 mm	Al E6/C-31 stainl. steel anod.
28.142.0000.114	cut to size	Al E6/C-0 silver anod.
28.142.0000.139	cut to size	Al E6/C-31 stainl. steel anod.

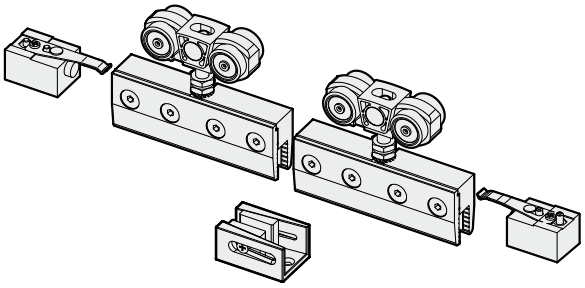

Accessory-Set for glass

- 2 carriers, 2 track stops, 1 floor guides
- floor guide available in 3 surface finishes

Art.-N°	Glass thickness	Material/Finish
28.314.0600.114	8-12 mm ESG	Al E6/C-0 silver anod.
28.314.0600.139	8-12 mm ESG	Al E6/C-31 stainl. steel anod.
28.314.0600.265	8-12 mm ESG	Al RAL 9005 powder coat
28.316.0500.114	8,76-10,76 mm VSG	Al E6/C-0 silver anod.
28.316.0500.139	8,76-10,76 mm VSG	Al E6/C-31 stainl. steel anod.
28.316.0500.265	8,76-10,76 mm VSG	Al RAL 9005 powder coat

Note:
Carrier for ESG: No glass preparation necessary when using VSG, made of 2 x ESG with pressure resistant inlayer.
Carrier for VSG: Glass drilling necessary when using VSG, made of 2 x ESG with standard PVB inlayer (please see page 43).

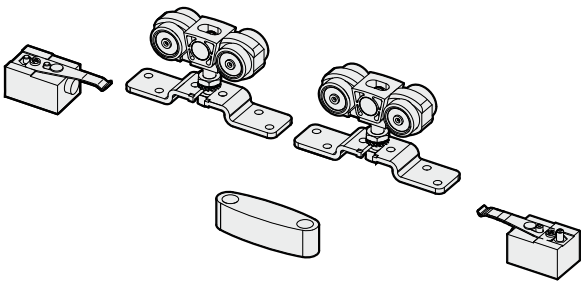

Accessory-Set for timber

- 2 carrier, 2 track stops, 1 floor guide

Art.-N°	Material/Finish
28.318.0000.505	Plastic natural

Note:
The silding door system can only be used for timber doors when installing without covers.

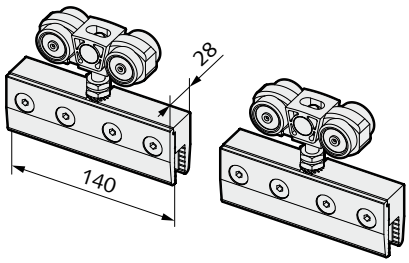

Carrier-Set

Art.-N°	Glass thickness	Material/Finish
28.320.0600.114	8-12 mm ESG	Al E6/C-0 silver anod.
28.322.0500.114	8,76-10,76 mm VSG	Al E6/C-0 silver anod.

Note:
Carrier for ESG: No glass preparation necessary when using VSG, made of 2 x ESG with pressure resistant inlayer.
Carrier for VSG: Glass drilling necessary when using VSG, made of 2 x ESG with standard PVB inlayer (please see page 43).

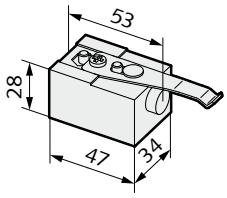

Track stop

- adjustable holding force

Art.-N°	Material/Finish
28.330.0000.550	Plastic white

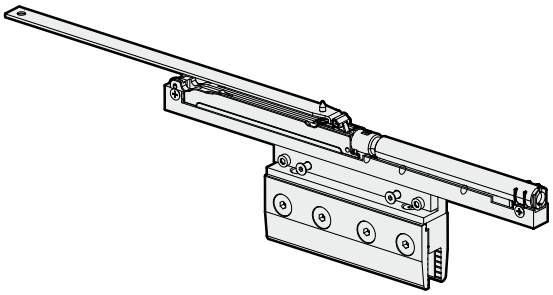

SOFT-STOP

- damped opening and closing
- **max. 100 kg leaf weight**
- single acting
- with glass clamp to fix in the sliding track
- subsequent installation into existing systems (without installation)
- corrosion protection: class 0

Art.-N°	Material/Finish
28.132.0000.565	Plastic black

Note:
Usable on one side: min. 580 mm leaf width
Usable on both sides: min. 910 mm leaf width

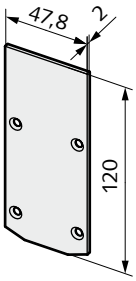

End cap

- for sliding track for ceiling fixing

Art.-N°	Material/Finish
28.220.0000.112	Al E4/C-0 silver anod.
28.220.0000.137	Al E4/C-31 stainl. steel anod.

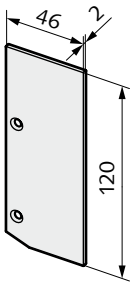

End cap

- for sliding track for wall fixing

Art.-N°	Material/Finish
28.222.0000.112	Al E4/C-0 silver anod.
28.222.0000.137	Al E4/C-31 stainl. steel anod.

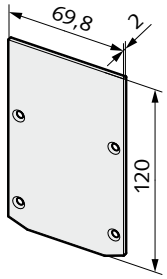

End cap

- for sliding track with sidepanel profile / ceiling fixing

Art.-N°	Material/Finish
28.224.0000.112	Al E4/C-0 silver anod.
28.224.0000.137	Al E4/C-31 stainl. steel anod.

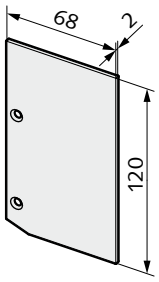

End cap

- for sliding track with sidepanel profile / wall fixing

Art.-N°	Material/Finish
28.226.0000.112	Al E4/C-0 silver anod.
28.226.0000.137	Al E4/C-31 stainl. steel anod.

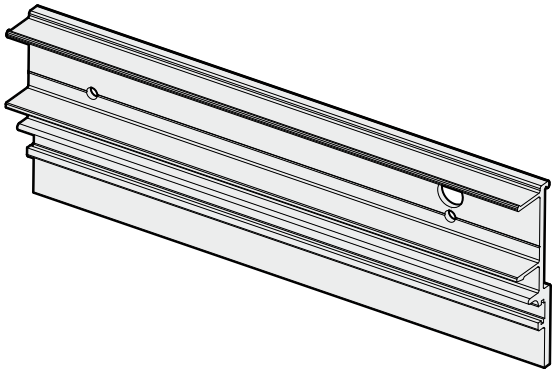

Sidepanel profile

- for 8–12 mm glass
- installation on sliding track

Art.-N°	Length	Material/Finish
28.110.0600.105	6.000 mm	Al mill finish
28.112.0600.105	cut to size	Al mill finish

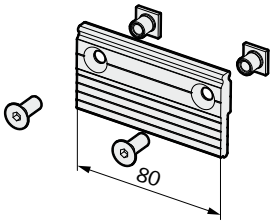

Glass clamp

- for sidepanel profile (2 pieces/metre)

Art.-N°	Material/Finish
28.114.0000.105	Al mill finish

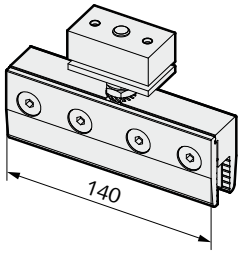

Sidepanel glass clamp

- for 8–12 mm glass
- installation on sliding track

Art.-N°	Glass thickness	Material/Finish
28.120.0600.114	8-12 mm ESG	Al E6/C-0 silver anod.

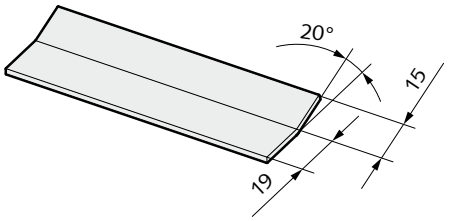

Screen protection profile

- to close the sidepanel in door area

Art.-N°	Length	Material/Finish
28.350.0000.114	2.000 mm	Al E6/C-0 silver anod.
28.350.0000.139	2.000 mm	Al E6/C-31 stainl. steel anod.
28.352.0000.114	cut to size	Al E6/C-0 silver anod.
28.352.0000.139	cut to size	Al E6/C-31 stainl. steel anod.

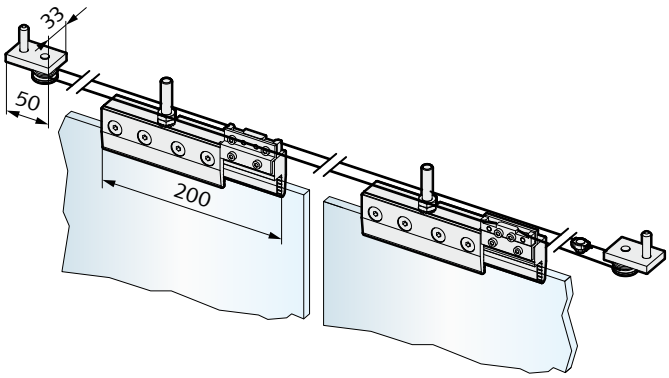

Bi-Parting-System

- for synchronous opening and closing of double leaf doors
- with wire rope, plastic deflection pulleys, carriers, stops and floor guide

Art.-N°	Material/Finish
28.130.0000.505	Plastic natural

Note:
Leaf width: min. 500 mm, max. 1.000 mm
Leaf weight: max. 80 kg per leaf (recommendation)

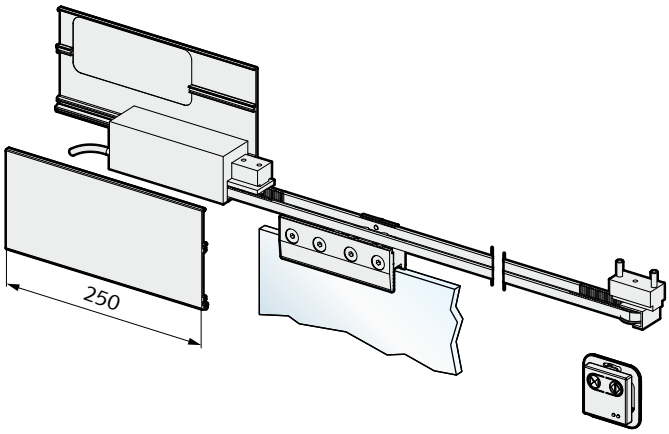

Low-Energy-Drive

- Low-Energy-Drive for automatically opening and closing
- drive with gear belt and deflection pulleys (with glass clamp)
- with 2 covers, 250 mm length
- drive activated by start button
- control unit and power supply for installing in flush-mounted box

Art.-N°	Length	Material/Finish
28.134.0000.114	cut to size	Al E6/C-0 silver anod.
28.134.0000.139	cut to size	Al E6/C-31 stainl. steel anod.

Note:
Leaf width: min. 500 mm, max. 1.500 mm
Leaf weight: max. 80 kg per leaf (recommendation)

Accessories

Extensive selection of accessories – many possibilities, more comfort.

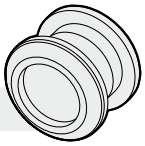

Sliding flush door handle

Sliding glass doors can be moved in an unobtrusive way using our sliding flush door handle. The sliding flush door handles are available in round and square shape.

.....details see page 38

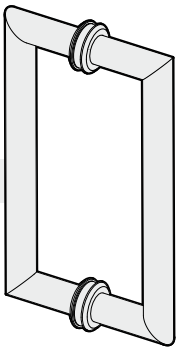

Door handles

Door handles meet the high demands of handling heavy doors. The door handles are available in straight and mitred form as well as in different lengths.

.....details see page 38

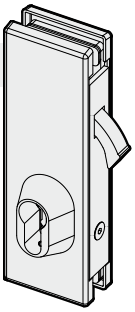

Hook bolt locks

Sliding glass doors can be easily and safely locked with our hook bolt locks. The locking is opposite to the rotation direction using the key. Profile cylinder, profile half cylinder and thumb cylinder are available for the locks. Strike box and strike plate complete the program.

.....details see page 39

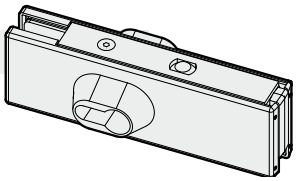

Universal corner locks

The safe bottom locking of sliding glass doors with our corner locks is possible. Profile cylinder, profile half cylinder and thumb cylinder are available for these locks.

.....details see page 40

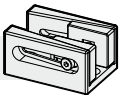

Floor guide

The floor guide is required for a comfortable slide of sliding glass doors and is mounted on the floor. The infinitely adjustable floor guide allows an adaption on every glass thickness between 8 and 12,76 mm.

.....details see page 42

Floor stop

In order to stop sliding glass doors, our floor stop is an optimal solution. The infinitely adjustable floor guide allows an adaption on every glass thickness between 8 and 12,76 mm.

.....details see page 42

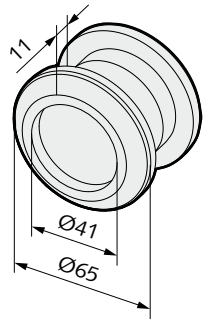

Sliding flush door handle, round

- corrosion protection: class 4

Art.-N°	Glass thickness	Material/Finish
28.204.0600.112	8-12,76 mm	Al E4/C-0 silver anod.
28.204.0600.137	8-12,76 mm	Al E4/C-31 stainl. steel anod.
28.204.0600.426	8-12,76 mm	304 matt brushed

Note:
Please consider the glass preparation details on page 43.

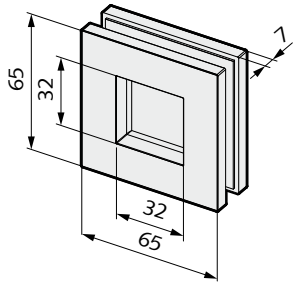

Sliding flush door handle, square

- adhesive bonding
- corrosion protection: class 4

Art.-N°	Glass thickness	Material/Finish
28.206.0500.426	8-12,76 mm	304 matt brushed

Note:
Please consider the glass preparation details on page 43.

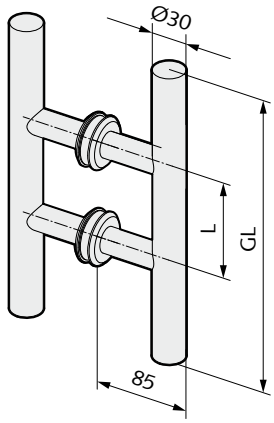

Door handle, straight form

- back to back fixing
- corrosion protection: class 3

Art.-N°	Glass thickness	GL	L	Material/Finish
37.230.0803.426	8-19 mm	300 mm	100 mm	304 matt brushed
37.230.0804.426	8-19 mm	400 mm	300 mm	304 matt brushed
37.230.0805.426	8-19 mm	500 mm	300 mm	304 matt brushed
37.230.0806.426	8-19 mm	600 mm	400 mm	304 matt brushed
37.232.0800.426	8-19 mm	cut to size	cut to size	304 matt brushed

Note:
For orders cut to size, please specify "GL" and "L". (Size "L" max. 2.000 mm with 2 fixing points, we recommend 3 fixing points for length exceeding 2.000 mm).
Please consider the glass preparation details on page 44.

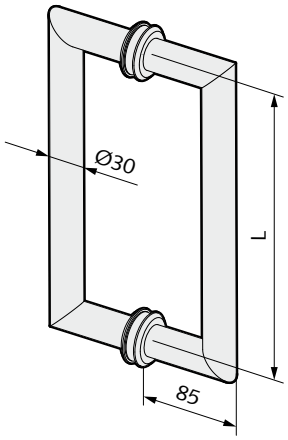

Door handle, mitred form

- back to back fixing
- corrosion protection: class 3

Art.-N°	Glass thickness	L	Material/Finish
37.240.0803.426	8-19 mm	350 mm	304 matt brushed
37.242.0000.426	8-19 mm	cut to size	304 matt brushed

Note:
For orders cut to size, please specify "L". (Size "L" max. 2.000 mm with 2 fixing points, we recommend 3 fixing points for length exceeding 2.000 mm).
Please consider the glass preparation details on page 44.

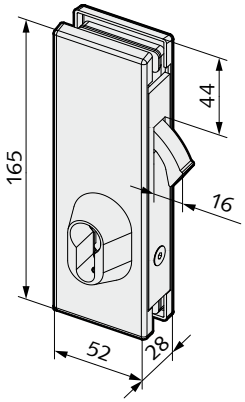

Hook bolt lock [1]

- prepared for profile cylinder
- corrosion protection: class 3

Art.-N°	Glass thickness	Material/Finish
28.210.0600.112	8-12 mm ESG	Al E4/C-0 silver anod.
28.210.0600.137	8-12 mm ESG	Al E4/C-31 stainl. steel anod.
28.210.0600.426	8-12 mm ESG	304 matt brushed
28.211.0600.112	8,76-12,76 mm VSG	Al E4/C-0 silver anod.
28.211.0600.137	8,76-12,76 mm VSG	Al E4/C-31 stainl. steel anod.
28.211.0600.426	8,76-12,76 mm VSG	304 matt brushed

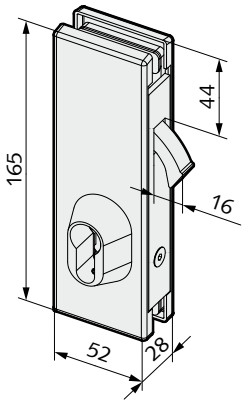

execution left

Hook bolt lock/profile half cylinder [1]

- prepared for profile half cylinder
- corrosion protection: class 3

execution left

Art.-N°	Glass thickness	Material/Finish
28.210.0610.112	8-12 mm ESG	Al E4/C-0 silver anod.
28.210.0610.137	8-12 mm ESG	Al E4/C-31 stainl. steel anod.
28.210.0610.426	8-12 mm ESG	304 matt brushed
28.211.0610.112	8,76-12,76 mm VSG	Al E4/C-0 silver anod.
28.211.0610.137	8,76-12,76 mm VSG	Al E4/C-31 stainl. steel anod.
28.211.0610.426	8,76-12,76 mm VSG	304 matt brushed

execution right

Art.-N°	Glass thickness	Material/Finish
28.210.0620.112	8-12 mm ESG	Al E4/C-0 silver anod.
28.210.0620.137	8-12 mm ESG	Al E4/C-31 stainl. steel anod.
28.210.0620.426	8-12 mm ESG	304 matt brushed
28.211.0620.112	8,76-12,76 mm VSG	Al E4/C-0 silver anod.
28.211.0620.137	8,76-12,76 mm VSG	Al E4/C-31 stainl. steel anod.
28.211.0620.426	8,76-12,76 mm VSG	304 matt brushed

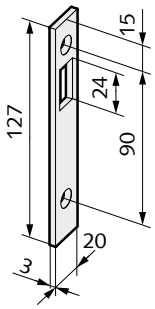

Strike plate

- corrosion protection: class 4

Art.-N°	Material/Finish
28.212.0000.426	304 matt brushed

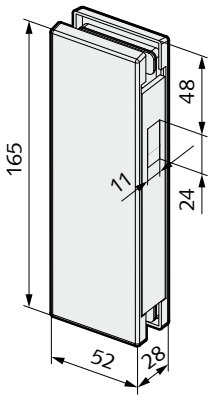

Strike box for hook bolt lock [1]

- corrosion protection: class 3

Art.-N°	Glass thickness	Material/Finish
28.214.0600.112	8-12 mm ESG	Al E4/C-0 silver anod.
28.214.0600.137	8-12 mm ESG	Al E4/C-31 stainl. steel anod.
28.214.0600.426	8-12 mm ESG	304 matt brushed
28.215.0600.112	8,76-12,76 mm VSG	Al E4/C-0 silver anod.
28.215.0600.137	8,76-12,76 mm VSG	Al E4/C-31 stainl. steel anod.
28.215.0600.426	8,76-12,76 mm VSG	304 matt brushed

[1] Please consider the glass preparation details on page 43.

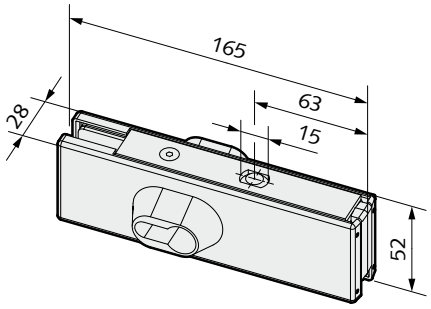

US 10.1 Universal corner lock

- with round bolt
- prepared for profile cylinder
- corrosion protection: class 3

Art.-N°	Glass thickness	Material/Finish
32.102.0600.112	8-12,76 mm	Al E4/C-0 silver anod.
32.102.0600.137	8-12,76 mm	Al E4/C-31 stainl. steel anod.
32.102.0600.426	8-12,76 mm	304 matt brushed

Note:
Please consider the glass preparation details on page 44.

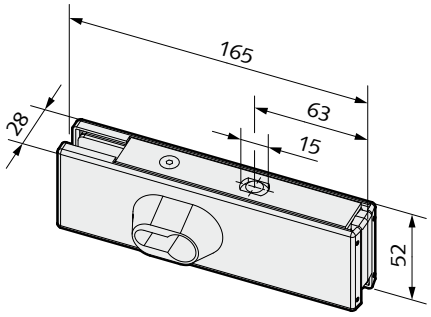

execution right

US 10.3 Universal corner lock/profile half cylinder [1]

- with round bolt
- prepared for profile half cylinder
- corrosion protection: class 3

execution left

Art.-N°	Glass thickness	Material/Finish
32.106.0610.112	8-12,76 mm	Al E4/C-0 silver anod.
32.106.0610.137	8-12,76 mm	Al E4/C-31 stainl. steel anod.
32.106.0610.426	8-12,76 mm	304 matt brushed

execution right

Art.-N°	Glass thickness	Material/Finish
32.106.0620.112	8-12,76 mm	Al E4/C-0 silver anod.
32.106.0620.137	8-12,76 mm	Al E4/C-31 stainl. steel anod.
32.106.0620.426	8-12,76 mm	304 matt brushed

Note:
Please consider the glass preparation details on page 44.

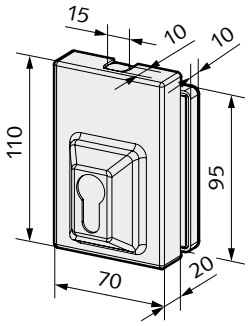

ES 30 Corner lock

- with round bolt
- prepared for profile cylinder
- 15 mm free glass edge
- corrosion protection: class 3

Art.-N°	Glass thickness	Material/Finish
32.300.0600.112	8-12,76 mm	Al E4/C-0 silver anod.
32.300.0600.137	8-12,76 mm	Al E4/C-31 stainl. steel anod.
32.300.0600.426	8-12,76 mm	304 matt brushed

Note:
Please consider the glass preparation details on page 44.

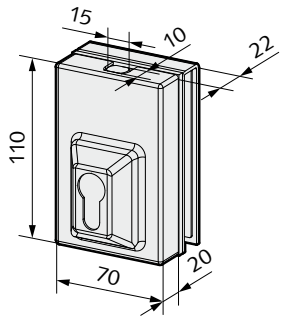

SO 30 Slide over corner lock

- with round bolt
- prepared for profile half cylinder
- with stainless steel bracket
- corrosion protection: class 3

Art.-N°	Glass thickness	Material/Finish
32.500.1000.112	10-12 mm	Al E4/C-0 silver anod.
32.500.1000.137	10-12 mm	Al E4/C-31 stainl. steel anod.
32.500.1000.426	10-12 mm	304 matt brushed

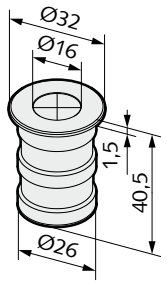

Floor socket with dust protector

- with spring loaded dust protector
- cover ring in stainless steel
- for round bolt Ø 15 mm
- corrosion protection: class 3

Art.-N°	Material/Finish
32.612.0000.426	304 matt brushed

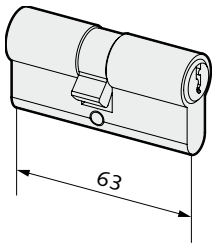

Profile cylinder

- according to DIN 18252 / EN 1303
- with 3 keys
- 63 mm length (31,5/31,5 mm)
- corrosion protection: class 3

Art.-N°	Keying	Material/Finish
01.901.3131.325	key to differ	Brass matt nickel plated
01.903.3131.325	keyed alike	Brass matt nickel plated

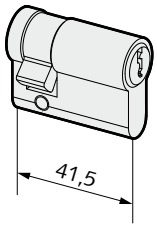

Profile half cylinder

- according to DIN 18252 / EN 1303
- with 3 keys
- 41,5 mm length (31,5/10 mm)
- corrosion protection: class 3

Art.-N°	Keying	Material/Finish
01.905.4100.325	key to differ	Brass matt nickel plated
01.906.4100.325	keyed alike	Brass matt nickel plated

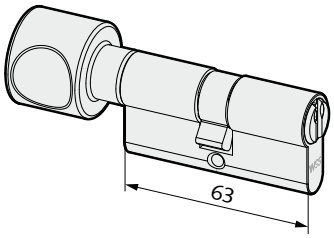

Profile thumb turn cylinder

- according to DIN 18252 / EN 1303
- with turn knob (Al E6/C-0 silver anodized)
- with 3 keys
- 63 mm length (31,5/31,5 mm)
- corrosion protection: class 3

Art.-N°	Keying	Material/Finish
01.913.3131.325	key to differ	Brass matt nickel plated
01.914.3131.325	keyed alike	Brass matt nickel plated

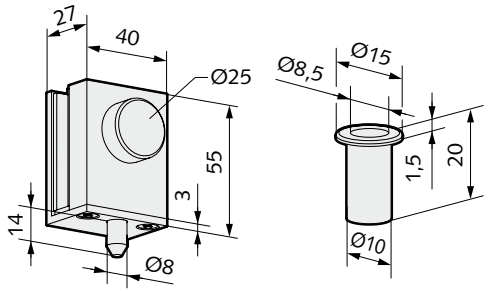

Slide over door bolt

- with matt nickel plated brass floor socket
- corrosion protection: class 2

Art.-N°	Glass thickness	Material/Finish
26.202.0400.112	8 mm	Al E4/C-0 silver anod.
26.202.0400.137	8 mm	Al E4/C-31 stainl. steel anod.
26.202.0900.112	10 mm	Al E4/C-0 silver anod.
26.202.0900.137	10 mm	Al E4/C-31 stainl. steel anod.

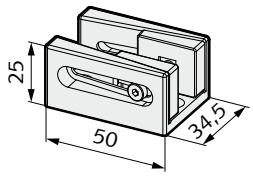

Floor guide

- adjustable
- corrosion protection: class 4

Art.-N°	Glass thickness	Material/Finish
28.360.0600.114	8-12,76 mm	Al E6/C-0 silver anod.
28.360.0600.139	8-12,76 mm	Al E6/C-31 stainl. steel anod.
28.360.0600.770	8-12,76 mm	Zinc cast RAL 9005 powder coat

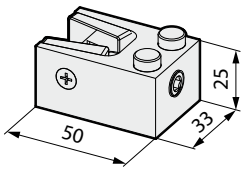

Floor stop

- adjustable
- corrosion protection: class 4

Art.-N°	Glass thickness	Material/Finish
28.370.0600.114	8-12,76 mm	Al E6/C-0 silver anod.
28.370.0600.139	8-12,76 mm	Al E6/C-31 stainl. steel anod.
28.370.0600.265	8-12,76 mm	Al RAL 9005 powder coat

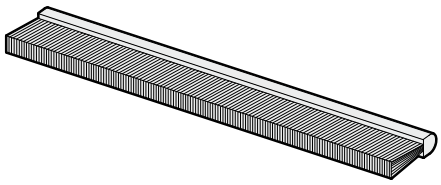

Brush seal

- length: 3.000 mm
- corrosion protection: class 3

Art.-N°	Material/Finish
33.500.0000.505	Plastic natural

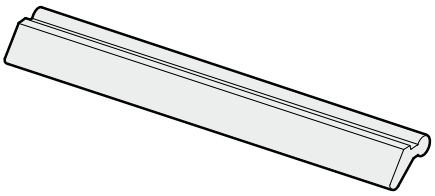

Rubber swipe seal

- length: 3.000 mm
- corrosion protection: class 4

Art.-N°	Material/Finish
33.504.0000.505	Plastic natural

Glass Preparations

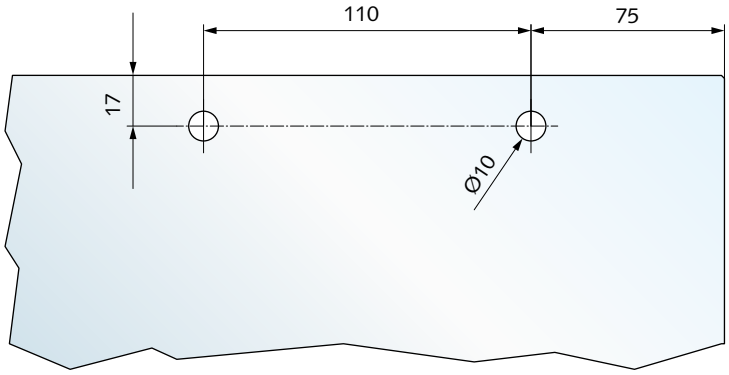

NOVA 180: carrier (VSG)

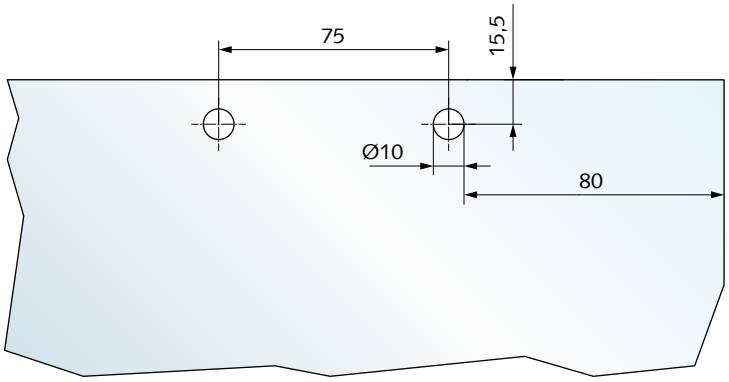

PURA 150: carrier (VSG)

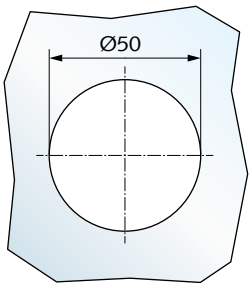

Sliding flush door handles
Art.-N°
28.204.0600.112 to
28.206.0500.426

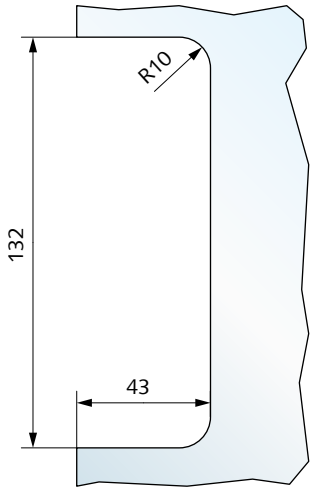

Hook bolt locks
Art.-N°
28.210.0600.112 to
28.211.0620.426
Strike boxes
Art.-N°
28.214.0600.112 to
28.215.0600.426

Glass Preparations

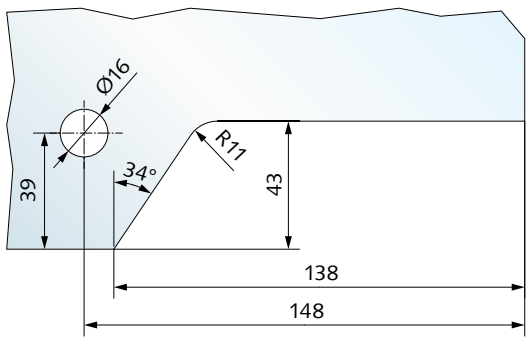

US 10.1 und US 10.3: Universal corner locks
Art.-N°
32.102.0600.112 to
32.106.0620.426

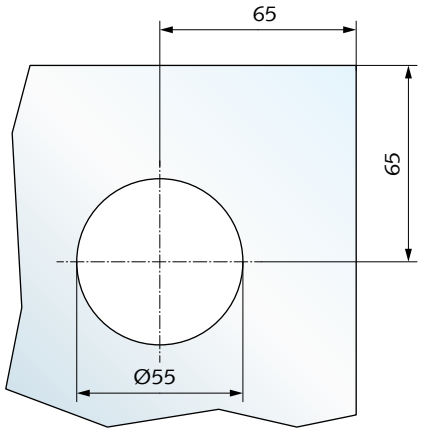

ES 30 Corner lock
Art.-N°
32.300.0600.112 to
32.300.0600.426

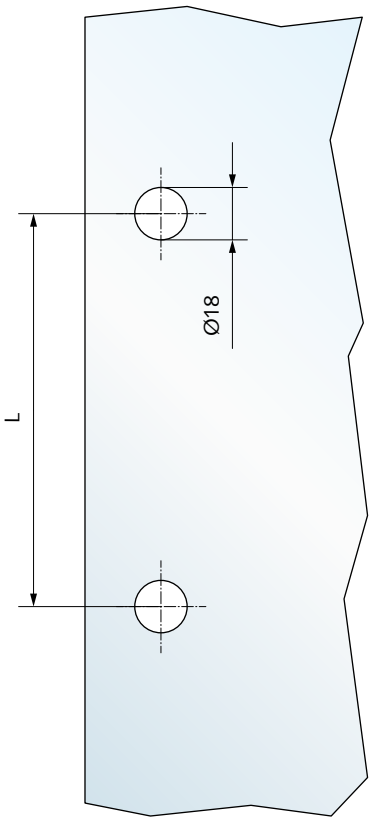

Door handles
Art.-N°
37.230.0803.426 to
37.242.0000.426

Materials and Surfaces

Aluminium

Anodizing after EURAS standard colour swatch and standard colours (dip colouring):
105 = mill finish
112 = E4/C-0 silver anodized
114 = E6/C-0 silver anodized
137 = E4/C-31 stainless steel anodized
139 = E6/C-31 stainless steel anodized

Powder coating (70% gloss degree):
265 = Al RAL 9005 jet black powder coated

Brass

325 = matt nickel plated

Stainless steel

426 = 304 matt brushed

Plastic

505 = natural
550 = white
565 = black
570 = grey

Zinc cast

705 = raw
770 = RAL 9005 jet black powder coated

Pre-treatment

E4 = grinded and brushed
E6 = chemical etched

Aluminium

E6/C-0 silver anodized (---.114)

E6/C-31 stainless steel anodized (---.139)

Stainless steel

304 matt brushed (---.426)

Information

The selection of available materials and surfaces can be different for each product.

These examples of colours are only for your guidance. Differences in colour are determined by the printing.

Slight deviations in colour are due to the manufacturing process and cannot be eliminated completely.

Items made of different materials can slightly differ in dimension compared to the images.

Further surface finishes are available. If required, please contact our sales department.

Index

Art.-N°	Page
01.901.3131.325	41
01.903.3131.325	41
01.905.4100.325	41
01.906.4100.325	41
01.913.3131.325	41
01.914.3131.325	41
26.202.0400.112	42
26.202.0400.137	42
26.202.0900.112	42
26.202.0900.137	42
28.101.0600.114	30
28.101.0600.139	30
28.103.0600.114	30
28.103.0600.139	30
28.105.0500.114	30
28.105.0500.139	30
28.107.0500.114	30
28.107.0500.139	30
28.110.0600.105	34
28.111.0600.114	31
28.111.0600.139	31
28.112.0600.105	34
28.113.0600.114	31
28.113.0600.139	31
28.114.0000.105	34
28.115.0500.114	31
28.115.0500.139	31
28.117.0500.114	31
28.117.0500.139	31
28.120.0600.114	35
28.130.0000.505	35
28.132.0000.565	33
28.134.0000.114	35
28.134.0000.139	35
28.140.0000.114	32
28.140.0000.139	32
28.141.0000.114	32
28.141.0000.139	32
28.142.0000.114	32
28.142.0000.139	32
28.204.0600.112	38
28.204.0600.137	38
28.204.0600.426	38
28.206.0500.426	38
28.210.0600.112	39
28.210.0600.137	39
28.210.0600.426	39
28.210.0610.112	39
28.210.0610.137	39
28.210.0610.426	39
28.210.0620.112	39
28.210.0620.137	39
28.210.0620.426	39
28.211.0600.112	39
28.211.0600.137	39
28.211.0600.426	39
28.211.0610.112	39
28.211.0610.137	39
28.211.0610.426	39
28.211.0620.112	39
28.211.0620.137	39
28.211.0620.426	39
28.212.0000.426	39
28.214.0600.112	39
28.214.0600.137	39
28.214.0600.426	39
28.215.0600.112	39
28.215.0600.137	39
28.215.0600.426	39
28.220.0000.112	33
28.220.0000.137	33
28.222.0000.112	33
28.222.0000.137	33
28.224.0000.112	34
28.224.0000.137	34
28.226.0000.112	34
28.226.0000.137	34
28.300.0000.114	32
28.301.0000.114	32
28.302.0000.114	32
28.314.0600.114	32
28.314.0600.139	32
28.314.0600.265	32
28.316.0500.114	32
28.316.0500.139	32
28.316.0500.265	32
28.318.0000.505	32
28.320.0600.114	33
28.322.0500.114	33
28.330.0000.550	33
28.350.0000.114	35
28.350.0000.139	35
28.352.0000.114	35
28.352.0000.139	35
28.360.0600.114	42
28.360.0600.139	42
28.360.0600.770	42
28.370.0600.114	42
28.370.0600.139	42
28.370.0600.265	42
28.401.0600.114	10
28.401.0600.139	10
28.403.0600.114	10
28.403.0600.139	10
28.405.0600.114	10
28.405.0600.139	10
28.407.0600.114	10
28.407.0600.139	10
28.411.0600.114	11
28.411.0600.139	11
28.413.0600.114	11
28.413.0600.139	11
28.415.0600.114	11
28.415.0600.139	11
28.417.0600.114	11
28.417.0600.139	11
28.550.0600.114	13
28.550.0600.139	13
28.550.0600.265	13
28.552.0600.114	13
28.552.0600.139	13
28.552.0600.265	13
28.554.0600.114	13
28.554.0600.139	13
28.554.0600.265	13
28.556.0600.114	13
28.556.0600.139	13
28.556.0600.265	13
28.560.0600.114	13
28.562.0600.114	13
28.570.0000.114	14
28.572.0000.114	14
28.574.0000.114	14
28.580.0600.114	15
28.582.0600.114	15
28.584.0600.114	15
28.586.0600.114	15
28.588.0000.114	15
28.590.0000.114	15
28.594.0000.570	16
28.598.0000.705	16
28.599.0000.705	16
28.601.0600.114	22
28.601.0600.139	22
28.603.0600.114	22
28.603.0600.139	22
28.605.0600.114	22
28.605.0600.139	22
28.607.0600.114	22
28.607.0600.139	22
28.620.0000.114	16,24
28.620.0000.139	16,24
28.622.0000.114	16,24
28.622.0000.139	16,24
28.700.0000.114	12,23
28.700.0000.139	12,23
28.701.0000.114	12,23
28.701.0000.139	12,23
28.702.0000.114	12,23
28.702.0000.139	12,23
28.710.0000.114	12,23
28.710.0000.139	12,23
28.711.0000.114	12,23
28.711.0000.139	12,23
28.712.0000.114	12,23
28.712.0000.139	12,23
28.714.0000.114	12,23
28.714.0000.139	12,23
28.716.0000.114	12,23
28.716.0000.139	12,23
28.720.0000.114	17,25
28.720.0000.139	17,25
28.722.0000.114	17,25
28.722.0000.139	17,25
28.730.0000.114	17,25
28.740.0000.114	12,23
28.740.0000.139	12,23
28.741.0000.114	12,23
28.741.0000.139	12,23
28.742.0000.114	12,23
28.742.0000.139	12,23
28.750.0000.114	17,25
28.750.0000.139	17,25
28.752.0000.114	17,25
28.752.0000.139	17,25
28.755.0000.114	17,25
28.755.0000.139	17,25
28.757.0000.114	17,25
28.757.0000.139	17,25
28.760.0600.114	24
28.760.0600.139	24
28.760.0600.265	24
28.762.0600.114	24
28.762.0600.139	24
28.762.0600.265	24
28.770.0600.705	24
28.772.0600.705	24
28.780.0000.705	24
32.102.0600.112	40
32.102.0600.137	40
32.102.0600.426	40
32.106.0610.112	40
32.106.0610.137	40
32.106.0610.426	40
32.106.0620.112	40
32.106.0620.137	40
32.106.0620.426	40
32.300.0600.112	40
32.300.0600.137	40
32.300.0600.426	40
32.500.1000.112	40
32.500.1000.137	40
32.500.1000.426	40
32.612.0000.426	41
33.500.0000.505	42
33.504.0000.505	42
37.230.0803.426	38
37.230.0804.426	38
37.230.0805.426	38
37.230.0806.426	38
37.232.0800.426	38
37.240.0803.426	38
37.242.0000.426	38

General Overview: Locks and Fittings for Glass

Catalogue

STUDIO Hardware
New perspectives through innovations. Top quality finishes. Locks and hinges for residential homes and commercial properties – with magnetic latches too.

Catalogue

OBJEKT Hardware
A variety of possibilities. Top quality finishes. Locks and hinges for commercial properties – for panic doors too.

Catalogue

SPRINT Sliding Door Systems
Space-saving and multi-functional, with SOFT-STOP, dual system and low-energy drive. Open up your rooms with SPRINT!

Basic catalogue

Locks and fittings for glass

The complete catalogue contains all products for interior- and exterior doors.

Brochure

SELCO –
Self-closing double action door hinges
The new door hinges for interior doors in the private and commercial sector. Max. door weight 70 kg.

Brochure

Locks and patch fittings for exterior doors

Flexible and logical: Reassuring and reliable security for all-glass constructions.

Download:
https://www.wss.de/en/service/kataloge/glas

Wilh. Schlechtendahl & Söhne
GmbH & Co. KG

Hauptstrasse 18–32
42579 Heiligenhaus
Germany

Phone: +49 (0) 20 56 / 17-0
Fax: +49 (0) 20 56 / 51 42

wss@wss.de
www.wss.de

based in 42579 Heiligenhaus,
Local court Wuppertal, HRA 20804

Managing Directors: Guido Lücker, Robin Fasel

VAT No: DE 121546484
Tax ID: 13957280071

All image, product, dimension and design information is correct at the time of going to press. We reserve the right to make any changes that may be required for technical and further development. We assume no liability for printing or other errors. Legal claims, regardless of their nature, may not be inferred from the use of our documents. No part of this document may be reproduced without our prior written consent.

Our General Terms and Conditions apply (see www.wss.de).

kat_K0200431_SPRINT_Schiebetuersysteme_GB
© 4/2023 • Wilh. Schlechtendahl & Söhne GmbH & Co. KG